radialdrilling
Advanced Well-Optimization Technologies

MASTER SAFETY AND HEALTH PROGRAM

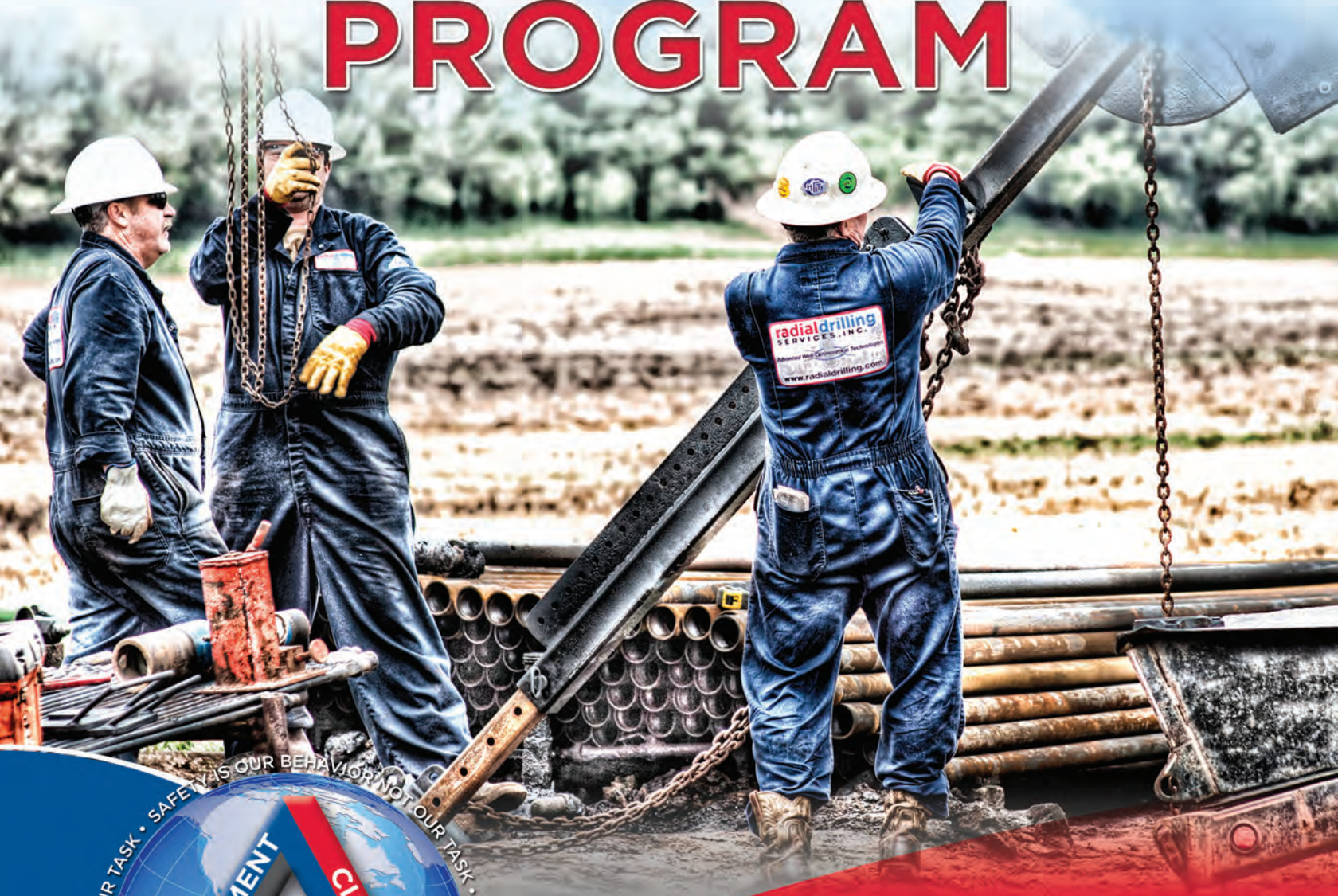

SAFETY IS OUR BEHAVIOR NOT OUR TASK • SAFETY IS OUR BEHAVIOR NOT OUR TASK • SAFETY IS OUR BEHAVIOR NOT OUR TASK

MANAGEMENT
CLIENT
CREW

radialdrilling

Advanced Well-Optimization Technologies

Radial Drilling Services, Inc.
4921 Spring Cypress Rd
Spring, TX 77379 USA
(P) +1.281.374.7507
(F) +1.281.374.7509
www.radialdrilling.com

radialdrilling
Advanced Well-Optimization Technologies

January 1, 2018

Radial Drilling Services, Inc. is a company dedicated to delivering superior service to the oil industry. A commitment to excellence and the pursuit of innovation in all facets of our business have been basic to our philosophy since the inception of our company. The company's investment in our employees and our focus on the needs of our customers has been instrumental in the progress and growth of this company.

We are committed to protecting the health and well-being of our employees, customers and the communities in which we operate. We have implemented an occupational safety program to comply with regulations and corporate policies that are effective on a global basis.

As we move forward, Management will provide the tools necessary to expand the safety program and we will build on our base of success and enhance our work for the future.

Sincerely,

Henk Jelsma
President/CEO
Radial Drilling Services, Inc.

HJ/pg

radialdrilling
Advanced Well-Optimization Technologies

Corporate Safety Team

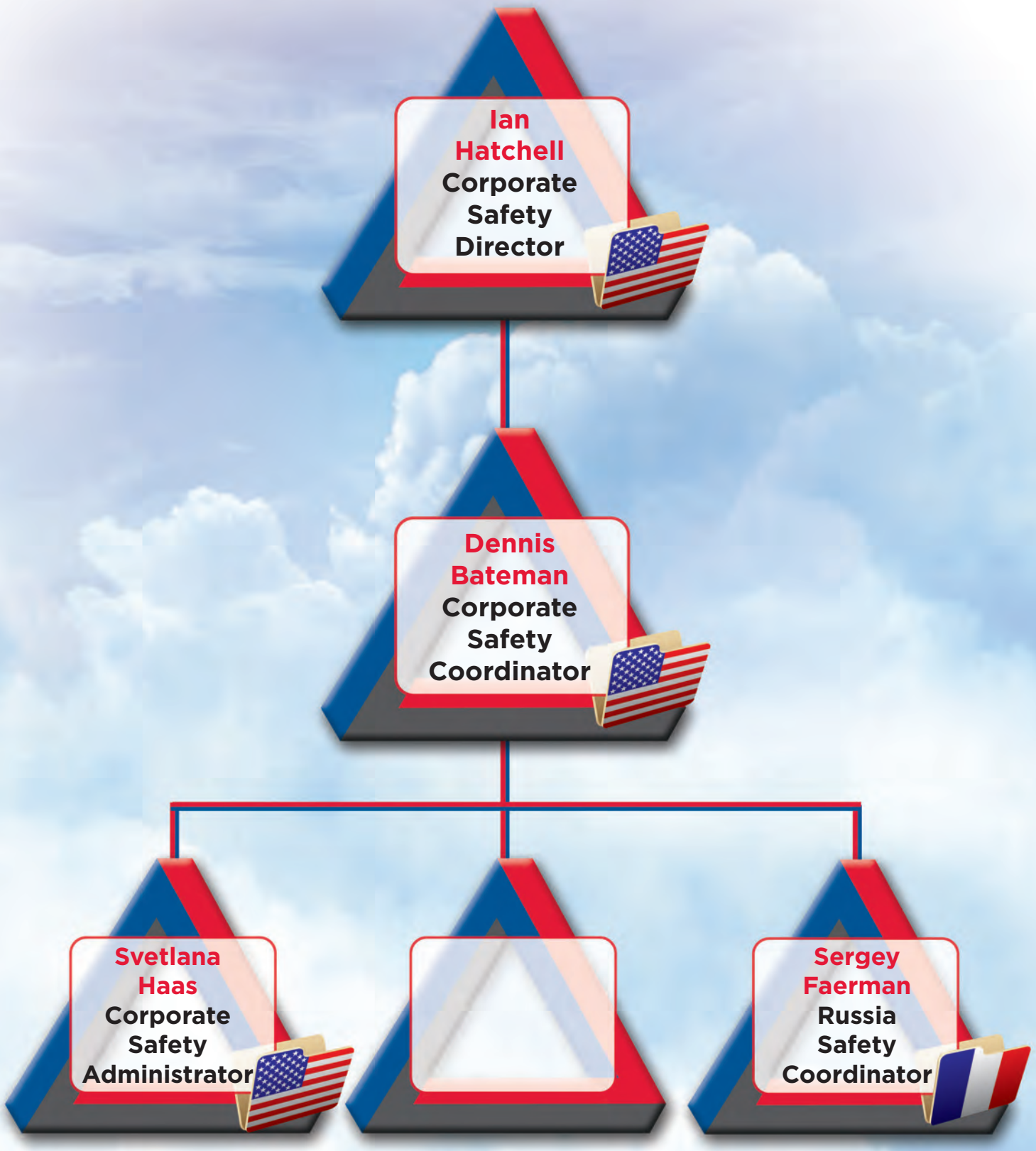

Safety Representatives

Ian Hatchell
Safety Director

Dennis Bateman
Corporate Safety Coordinator
Safety Committee Chairperson

Sergey Faerman
Russia Safety Coordinator

Terence O'Brien
Safety Committee

Henk Jelsma
Safety Committee

Svetlana Haas
Corporate Safety Administrator

Field Supervisors

radialdrilling
Advanced Well-Optimization Technologies

Master Safety & Health Program

CONTENTS

ACCIDENT PREVENTION PLAN

MANAGING THE COMPANY SAFETY PROGRAM

SECTION 1

Radial Drilling Services, Inc.
(T) +1.281.374.7507
(F) +1.281.374.7509
web: www.radialdrilling.com
e-mail: info@radialdrilling.com

CONTENTS

Section 1 – Accident Prevention Plan/Managing the Company Safety Program

Statement of Company Safety Policy

Each person who works at Radial Drilling Services, Inc. is important. Our success with Customers, and consequently the overall success of this business, depends upon the individual -- his or her personal skills, energies and contributions. At the same time, we are concerned and supportive of each other.

Respecting this, the Company strives to provide a safe and healthful workplace. Additionally, the Company subscribes to these principles:

- Accidents can be prevented through implementation of effective Safety and Health Control Policies and Programs.
- Safety and Health Controls are major parts of our daily work.
- Accident prevention is good business. It increases productivity and minimizes human suffering.
- Management is responsible for providing a reasonable and safe workplace for Employees.
- Employees are responsible for following safe work practices, Company rules, and for preventing accidents and injuries.
- Management must monitor Company safety performance, working environment and conditions to ensure that safety objectives are achieved.
- Our Safety Program requires the participation of all Employees -- to improve safety awareness, and to prevent accidents and injuries.

Your involvement, cooperation and personal commitment to safety are essential. Keeping a safe workplace is a Team effort. We need you on this Team. The Company welcomes any helpful comments.

Together, we can make the difference. Together, we ***CAN*** prevent accidents and injuries. We must work, every minute of every hour of every working day, to keep each other safe in the workplace.

Charlie Guilbeau
Corporate Safety Director

Authority & Accountability

The Corporate Safety Director (hereafter the Director) will accept the responsibility for providing resources and guidance for development and implementation of safety and health programs for the Company.

Additionally, the Director will establish management policies and procedures toward effective implementation of these programs.

The Director will have the authority to delegate safety and health responsibilities, as he deems appropriate, to subordinates. However, the Director will be responsible for the implementation of the Company's written *Master Safety & Health Program* (the binder containing specific written safety and health programs).

Company Supervisors will have the duty and authority to approve and carry out all disciplinary actions for those who violate policies, procedures, rules and regulations relating to an established safety and health program. Supervisor responsibilities and duties relating to this safety and
health program are also explained in greater detail on the following pages.

Each Employee will be responsible for following established policies, procedures, rules, regulations and orders in accordance with Company safety and health programs. Each Employee should become actively involved in safety activities to help maintain a safe and healthful workplace environment for all involved. *Individual Employee Responsibilities* relating to safety and health are explained in greater detail on the following pages.

Contractors that perform work at a Company job site are responsible for ensuring that their personnel perform work in compliance with Company safety standards, as well as federal and state occupational safety and health requirements and other pertinent regulations.

The Company's written *Accident Prevention Plan* and *Safety & Health Program* will be made available to all contractors for review. Likewise, contractors will provide to the Safety Coordinator a copy of its written safety and health programs relating to work that will be performed at a Company work location.

Safety Coordinator Responsibilities

The Director will designate an individual to serve as Safety Coordinator for Radial Drilling Services, Inc.

The Safety Coordinator will be responsible for the overall implementation of the Company's safety and health programs. This will include taking steps to identify workplace hazards and conditions that are unsanitary, unhealthy or dangerous to Employees.

When such hazards or conditions are identified, the Safety Coordinator will initiate timely and appropriate corrective actions.

The Safety Coordinator will be knowledgeable about general workplace safety and health issues. This knowledge will be gained through training and experience.

The Safety Coordinator will monitor training and accident prevention activities as measured by criteria such as:

- Records of new hire safety orientations and ongoing safety training activities
- The tracking of accident and "near miss" incidents
- Injury and illness incidents that are recordable on the OSHA 300 form
- Workers' compensation injury and illness initial and ongoing reports
- Insurance company loss runs and statistical analysis

Other Safety Coordinator responsibilities include, but will not be limited to:

- Conduct or schedule to be conducted safety inspections, surveys, audits and assessments throughout the Company workplace.
- Review safety inspection reports and unsafe or unsanitary conditions that are reported by Supervisors, Employees or others. Obtain corrective actions as needed.
- Resolve questions, approve and/or recommend necessary expenditures to correct unsafe conditions.
- Actively support and promote Company safety and health programs and activities.
- Plan, coordinate, perform and/or delegate safety training of Supervisors and Employees.
- Maintain appropriate training and testing records for each Employee.
- Report unsafe Employee practices and/or behaviors to their respective Supervisors.
- Review and monitor any disciplinary actions and/or remedial training.

Safety Coordinator Responsibilities

- Conduct or delegate regular Safety Meetings with Supervisors and Employees to promote safety awareness and compliance with the Safety & Health Program.

- Investigate or cause the investigation of at-work accidents, injuries, illnesses and “near miss” incidents. Assist as needed when these investigations are performed by Supervisors or others.

- Review investigation reports to determine possible preventative actions. Take immediate corrective actions as required.

- Ensure that reportable injuries are being documented on applicable state workers’ compensation forms and OSHA forms 300A, 301 and 300 as required.

- Review the safety and health programs of contractors before they perform work on a Company premises. Contractor safety and health programs must meet OSHA requirements. They should be effective in protecting contractor personnel and also Company Employees who may be exposed to hazards associated with work performed by contractors.

- Report any fatality, or the hospitalization of three or more employees from any Company incident to the local OSHA office or to the toll free number of 800-321-6742. This will be done within eight hours of the incident’s occurrence, or within eight hours of learning of the incident occurrence. Reportable multiple hospitalizations from any single incident are those that occur within 30 days of the incident.

- If an OSHA Injury and Illness Survey Form for the Bureau of Labor Statistics is received, you must fill it out, even if you are usually exempt from keeping an OSHA 300 log. Response must be made by the deadline explained in the notice.

Supervisor Safety Responsibilities

Supervisors will be responsible for following and promoting safety rules, policies and safe work procedures throughout the Company workplace.

For purposes of this program, the term "Supervisors" will be defined as any Employee who has the authority to direct the work of one or more other Employees.

Supervisors will be concerned about the safety and welfare of fellow Employees in the Company workplace. Consequently, if a Supervisor observes a hazard or safety violation in an area outside of his or her direct authority, he or she will report this to the Supervisor in charge of the work area and then to the Safety Coordinator.

If the hazard or violation presents an immediate danger to life or health, the Supervisor observing the danger will intervene immediately to the extent necessary to prevent injury or harm to persons without causing danger to him or herself. This protection of persons is of primary importance! Preventing damage to Company facilities and property is a secondary priority.

Any observed hazard requiring corrective action that is outside the Supervisor's authority and/or ability to correct or eliminate, will be immediately reported to a Safety Coordinator.

Supervisor job responsibilities include:

- Help ensure compliance with Company safety rules and safe work procedures through daily supervision of Employees. Take corrective and disciplinary action as needed.
- Conduct and/or assist in the safety orientation of new hires about department safe work practices and potentially hazardous conditions within the assigned work area. This includes ensuring that personal protective equipment (PPE) is either issued or available to new hires and re-assigned Employees. Initial safety training of new and re-assigned Employees will be completed before they begin duties in the Company workplace.
- When possible, correct unsafe conditions anywhere they are observed in the workplace. If the situation involves another Supervisor's area of responsibility, or if additional authorization or resources are required, inform the Safety Coordinator or, in his or her absence the senior Supervisor in charge of overall Company operations.
- Help ensure that all accidents, injuries and "near miss" incidents are reported by Employees.
- Investigate reported accidents and "near miss" incidents in accordance with Company policies and procedures.

- If an injury requires more than self-administered first aid, make sure that the Employee receives first aid and medical attention as needed. This may include taking the injured Employee to the Company's designated medical provider, or arranging for transportation. Report any such incident to the Safety Coordinator immediately.

- In emergency situations, alert and cooperate with emergency medical, fire and/or police. Notify the Safety Coordinator promptly after meeting immediate needs of the emergency.

- All Supervisors will work to develop and support safety awareness throughout the workplace. This includes maintaining an open and responsive attitude when Employees ask about or raise safety issues.

- All Supervisors will set a good example with respect to safety by their personal behavior. This includes wearing personal protective equipment in areas where it is required, and personally complying with Company safety policies and safe work procedures.

Employee Safety Responsibilities

Management considers the health and safety of each Employee to be a Company core value. All Employees will share and respect this value.

Employees must assume primary responsibility for their own safety because no other person can fulfill this role. Employees must make every initiative to protect their own safety and that of fellow workers.

Employees will learn, understand and follow Company safety rules and safe work procedures. This includes maintaining an awareness of the potential hazards pertaining to their work assignment.

Safety compliance is a condition of employment at the Company.

Employees are not required to perform any task that they believe to be dangerous or unsafe. Below are other individual Employee safety responsibilities:

- Employees will perform duties as assigned by the Company through its Supervisors, and will not perform work that is outside the scope of their employment.
- Employees will utilize personal protective equipment (PPE) when it is required.
- Before beginning special work or new assignments, Employees will review applicable safety rules.
- If an Employee has any question about how a task should be done safely, he or she will suspend this work until he or she has discussed the situation with the Supervisor. Together, the employee and Supervisor will determine the safest way to accomplish the task.
- If, after discussing a safety situation with the Supervisor, the Employee still has questions or concerns, he or she will notify the Safety Coordinator. If the Safety Coordinator is not able to answer questions or address the situation to the Employee's satisfaction, the Employee will notify the Director.
- If an Employee observes what he or she believes is a hazardous condition, unsafe work practice, defective machine, tool, vehicle, facility or equipment in the workplace, he or she will report this immediately to his or her Supervisor. If the Supervisor is not immediately available, the Employee will take action as necessary to protect others from what they believe is the hazard. This may include taking a malfunctioning machine or tool out of service so that it is not used by someone else.
  The Employee then will notify a Supervisor or the Safety Coordinator at his or her earliest opportunity, and no later than the end of the day's shift.

Safety Meetings

Employee Safety Meetings will be conducted at least monthly to consider and discuss safety, health, environmental and security issues regarding Company and job site operations.

The primary function of these meetings is to promote safety awareness and communication throughout the workplace.

The type and manner of meetings will be determined by the Safety Coordinator. Methods may include in-person meetings of Employee groups, or meetings held between different locations through telephone, internet or other types of interactive communications.

Employees and Supervisors will attend and participate in Safety Meetings. Participation will include individuals raising safety-related issues for discussion.

Should a scheduled meeting have to be postponed, it will be held later on a date and at a time determined by the Safety Coordinator.

A written record of each Safety Meeting will be made to document the date, time, location and topic(s) covered or discussed. This documentation will include the printed name and signature of the meeting presenter or facilitator, and the printed name and signature of each individual attending the meeting.

Safety Meeting documentation will be maintained by the Supervisor in a file. A copy will be forwarded to the Safety Coordinator for review.

Employees Reporting a Hazard Are Protected

The purpose of this section is to state Company policy and procedure regarding protection for Employees who report a safety hazard. It affects all organizational units of Company operations.

POLICY & PROCEDURES

It is the policy and philosophy of the Company that every Employee must feel secure and comfortable in reporting a known or perceived safety hazard to his or her Supervisor, to higher management within the Company, and to any appropriate governmental authority.

To this end, and to protect the legitimate rights, health and safety of every Employee, it is the policy of the Company that no person will discharge or in any manner discriminate against any Employee who reports or calls to the attention of management what he or she believes to be a safety or health hazard; or any unsafe, unhealthy condition or situation in the workplace.

Furthermore, no person will discharge or in any manner discriminate against any Employee because such Employee has filed any complaint, instituted or caused to be instituted any proceeding under or related to state or federal occupational health and safety law, has testified or is about to testify in any such proceeding, or because of the exercise by such Employee on behalf of himself or others of any right afforded by state or federal law.

Any Employee who feels he or she has been discriminated against for any of the above reasons should report this directly to the Safety Coordinator or an appointed alternate.

The intention of this policy is to support legitimate Employee comments, suggestions and complaints, and to ensure protection against illegal discrimination.

At the same time, the Company will take appropriate action in response to the filing of a false claim, or a claim with little merit that Company management judges to have been filed primarily to harass the Company, an individual Employee or Supervisor.

Access to Employee Exposure & Medical Records

Employees and their designated representatives have a right of access to relevant exposure and medical records relating to their employment with the Company. Access to such records will be allowed in accordance with OSHA Standard 1910.1020.

Access by Employees, their representatives and OSHA is necessary to yield both direct and indirect improvements in the detection, treatment, and prevention of occupational disease.

Nothing in this policy is intended to affect existing legal and ethical obligations concerning the maintenance and confidentiality of employee medical information, the duty to disclose information to a patient/employee or any other aspect of the medical-care relationship, or affect existing legal obligations concerning the protection of trade secret information.

“Access” will mean the right and opportunity to examine and copy.

Whenever an Employee or designated representative requests access to a record, the Company will assure that access is provided in a reasonable time, place, and manner.

If the Company cannot reasonably provide access to the record within fifteen (15) working days, the Company will, within the fifteen (15) working days, notify the Employee or designated representative requesting the record of the reason for the delay and the earliest date when the record can be made available.

The Company will require of the requester, in writing, only such information as should be readily known to the requester and which may be necessary to locate or identify the records being requested (e.g. dates and locations where the employee worked during the time period in question).

A copy of 29 CFR 1910.1020 is maintained by the Company for general reference and review by Employees.

The Company has implemented a program to identify, correct and control hazards on an ongoing basis. These activities will be utilized by in-house (office and administrative personnel) as well as field survey teams and employees involved in field operations.

SAFETY & HEALTH SELF-INSPECTIONS

In-house and field Supervisors will conduct a safety self-inspection at least monthly in their area(s) of responsibility. Inspection will include, but will not be limited to: any vehicles, tools, equipment, machinery, operating procedures and any existing and\or potential hazards on the work site, or working conditions that are unsanitary, hazardous or dangerous to Employees.

The Safety Coordinator and Supervisors will develop one or more self-inspection checklists specific to operations. Periodically, the list will be reviewed and updated as required regarding potential hazards for identification during inspections, injury reports, “near misses,” Employee observations and suggestions.

Completed self-inspection checklists will become a part of the permanent record of the inspection.

Each checklist will indicate the location or specific site or area surveyed, name and title of the inspector, date and time of the inspection, corrective action(s) taken for specific hazards or violations, and specific person(s) either initially informed or assigned to make sure that corrective actions are effectively implemented.

The self-inspection report will be forwarded to the Safety Coordinator for review, recommendations as required, trend analysis, follow-up and confirmation of corrective action(s).

Employees will be notified of hazards identified in the report that pose an immediate threat of physical harm or property damage, as well as measures to eliminate, correct or control specific hazards.

Accident Reporting & Investigations

The Company will investigate any work-related accident, injury or near miss incident involving Employees or other persons; or significant damage to Company or host employer property. This investigation will be used to identify and document root causes, develop preventive measures and implement corrective actions as indicated.

REPORTING

Employees will report the following to their immediate Supervisor as quickly as possible:

- An incident that results in injury or illness of any magnitude, including first-aid-only cases;
- An incident resulting in significant property or equipment damage; or
- A near miss incident that had the potential of causing injury, illness or significant property damage.

ACCIDENT INVESTIGATION

The Safety Coordinator will be responsible for conducting or overseeing incident investigations. Upon notification of an incident, the Safety Coordinator, or someone the Safety Coordinator may designate, will begin an investigation to determine:

- How the incident occurred;
- Special circumstances involved;
- Underlying, indirect or associated causes; and
- Corrective actions or preventive measures and controls indicated by investigation results.

Incidents involving multiple Supervisors will be investigated as a joint effort directed and overseen by the Safety Coordinator.

DOCUMENTATION

All activities and findings of the investigations will be documented and recorded for review by the Safety Coordinator.

Accident and incident investigation documentation will record, as a minimum, the following information:

- Date of occurrence;
- Name of person(s) involved, job title, area assigned and length of experience in the Company with this job;
- Location of occurrence;
- Nature and severity of injury or illness;
- Name of Supervisor(s) involved in the investigation;
- Job assignment or duties being performed at time of incident;
- A list of any Personal Protective Equipment and/or operator certification(s) required for this job or assignment, and whether the person(s) involved were using this PPE and/or held current certifications as required;
- Special circumstances or encumbrances;
- Details of how the accident or incident occurred;
- Equipment affected or involved;
- Written statements of the person(s) injured or directly involved (unless un available due to injury);
- Names and written statements of witnesses;
- Apparent direct cause;
- Apparent indirect, underlying or contributing factors (including fault or failure in Safety & Health Program elements); and
- Corrective action(s) implemented or preventive measures taken (including Safety & Health Program adjustments as required).

Analysis & Review

Company management and the Safety Coordinator will periodically review and analyze records and documentations pertaining to ongoing implementation of the Safety & Health Program, accidents, injuries and near miss incidents.
This review will focus on hazard analysis and recognition of any developing trends. Trend analysis will identify recurring accidents and near miss incidents resulting in, or potentially involving injury, illness or property damage.

The analysis also will be used to identify deficiencies in program components so that enhancements can be made as needed.

This process will include review of Employee training records to ensure that new hire and safety procedures training are being accomplished in accordance with Company requirements.

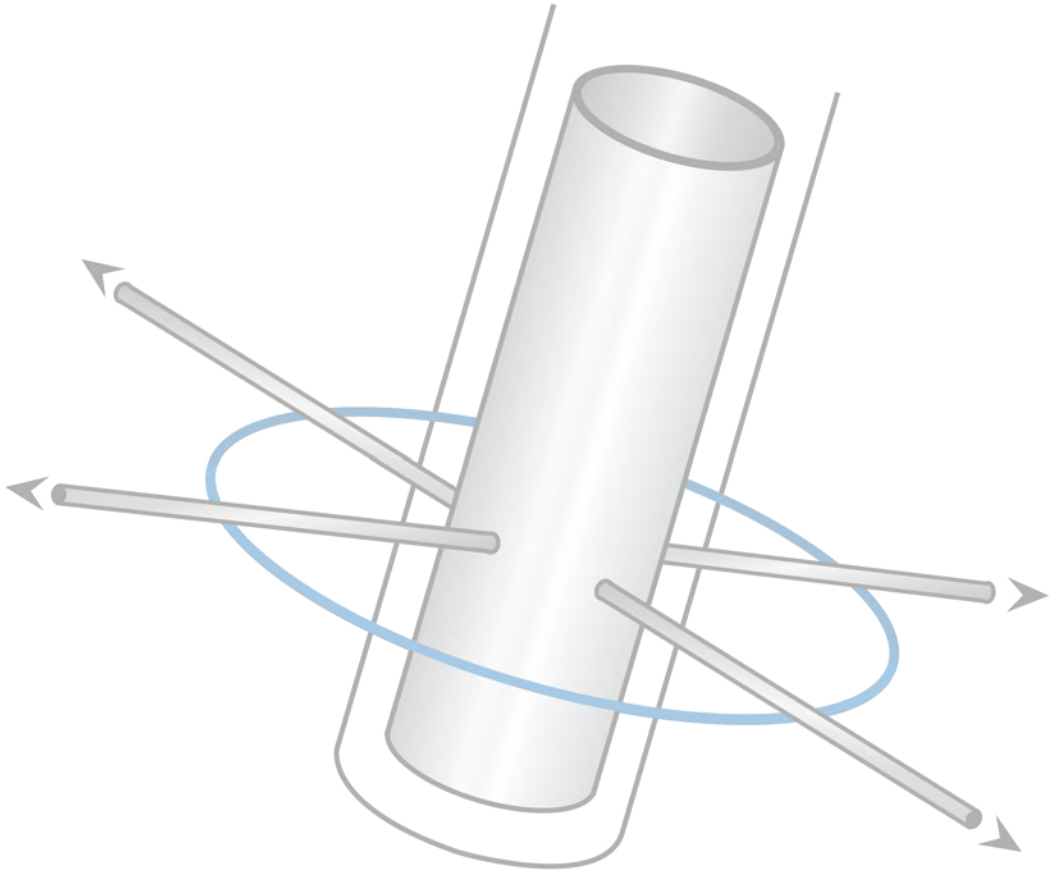

Orientation & Training

The Company will provide initial safety and health orientation and ongoing safety training to Employees at all levels of the organization.

The Safety Coordinator will develop, implement and maintain safety and health orientation and training programs. These are intended to educate and familiarize Employees about safety and health practices, rules and safe work procedures established by the Company.

Safety orientation and training requirements apply to all Company Employees.

Management will support safety orientation and training programs with sufficient allocations of time and funding for effective implementation.

TRAINING & DEVELOPMENT

Safety and health orientations and training will inform Employees about:

- Potential hazards associated with the work area;
- Potential hazards associated with specific job or task assignments;
- Emergency response, evacuation and shelter-in-place procedures;
- Personnel Protective Equipment (PPE) required for specific tasks or assignments;
- Hazard Communication Standard (Right-to-Know) information about chemicals used in the workplace;
- Specific equipment operations training related to Employee tasks or job assignments;
- Company safety rules and safe work procedures;
- Employee reporting requirements regarding safety hazards, accidents, injuries and near miss incidents;
- Accident investigation procedures and requirements; and
- Personnel health monitoring requirements as applicable to a task or job assignment.

Employee safety and health training will be implemented in three ways:

- New Hire Safety & Health Orientation;
- Reassigned Personnel Safety and Health Orientation; and
- Ongoing / Annual Safety & Health Training

NEW HIRE SAFETY & HEALTH ORIENTATION

Safety Orientation will be given to all newly hired Employees prior to the initial work assignment.

New Hire Safety Orientation includes an overview of the Safety & Health Program, plus explanation of Individual Employee Safety Responsibilities; the written Hazard Communication Standard (Right-to-Know) Program; General Safe Working Procedures; Job-Specific and Site- Specific Safety and Health Procedures (including special training about Company safety and safe work procedures); Fire Extinguisher Training and Emergency Response Procedures.

Each New Hire will be given a tour of the facility or work location and an opportunity to ask the Supervisor questions.

REASSIGNED PERSONNEL SAFETY & HEALTH ORIENTATION

Personnel given a new work assignment will receive an orientation on safety rules and safe work procedures specifically relating to these new duties.

This is referred to as the ***REASSIGNED PERSONNEL SAFETY ORIENTATION.*** In addition to job-specific safety training, reassigned personnel will receive information and training on the chemical hazards and emergency response procedures for the new work area.

ONGOING SAFETY & HEALTH TRAINING

Employees will receive ongoing safety and health training through Safety Meetings and other methods as determined by the Safety Coordinator. This training will support safety and hazard awareness, refresher training, and reinforcement of safe work procedures.

Topics may include, but are not limited to:

- Hazard Communication/Chemical Safety/Right To Know
- Proper Selection and Use of Personal Protective Equipment
- Responding to Injuries and Illnesses at Work – First Aid and CPR Options
- Bloodborne Pathogens Awareness
- Fire Safety, Prevention and Response
- Electrical Safety, Ground Fault Circuit Interrupters and Assured Grounding
- Control of Hazardous Energy – Lockout and Tagout
- Emergency Response, Evacuation and Shelter In Place Procedures
- In-House and Job Site Housekeeping for Safety/ Safe Walking and Working Surfaces
- Material Handlings/Preventing Back Injuries
- Safe Operations of Vehicles and Powered Equipment
- Weather-Related Illnesses and Hazards/ Safety Awareness for Working Outdoors
- Office Safety for in-house personnel

ANNUAL SAFETY & HEALTH TRAINING

Based on the individual work assignment, Employees will receive annual safety training and recertification as required by Company safety and health policies and OSHA.

A list of required annual training and recertification(s) will be developed and maintained by the Safety Coordinator. The list will be used to track and prompt mandatory Employee safety training and certifications as required for individual Employees.

Annual training topics may be included in Monthly Safety Meetings, as well as specific topics selected by the Safety Coordinator to support specific work operations and environments.

DOCUMENTATION OF TRAINING

The Safety Coordinator will maintain a written record of safety training taken by each Employee during the year. Employee safety and health training will be documented with at least the following information:

- Date of training;
- Printed name and signature of the person conducting training, and affiliation if the trainer is not a Company Employee;
- Subject matter;
- Printed name and signature of each attendee.

Individual training records will be maintained by the Safety Coordinator in a file.

Concepts About General Safety & Specific Duty Training

The Safety & Health Program is designed to provide detailed information to Employees, as well as serve as a training guide and reference.

All Employees will receive ***GENERAL SAFETY TRAINING*** as designated by the Safety Coordinator. This involves health and safety subject matter that pertains to all Company operations.

Job-specific or task-specific safety and health orientation is presented as ***SPECIFIC DUTY TRAINING.*** It is provided to Employees who are assigned to work that requires specialized safety and health knowledge, understanding and proficiency.

Examples of *Specific Duty Training include:* operation of powered industrial trucks, mobile cranes, Company vehicles and powered equipment; authorized person training for any Employee who places and removes a lockout or tagout during a work assignment; and any type of work that requires specific individual training under Company safety policies or OSHA regulations.

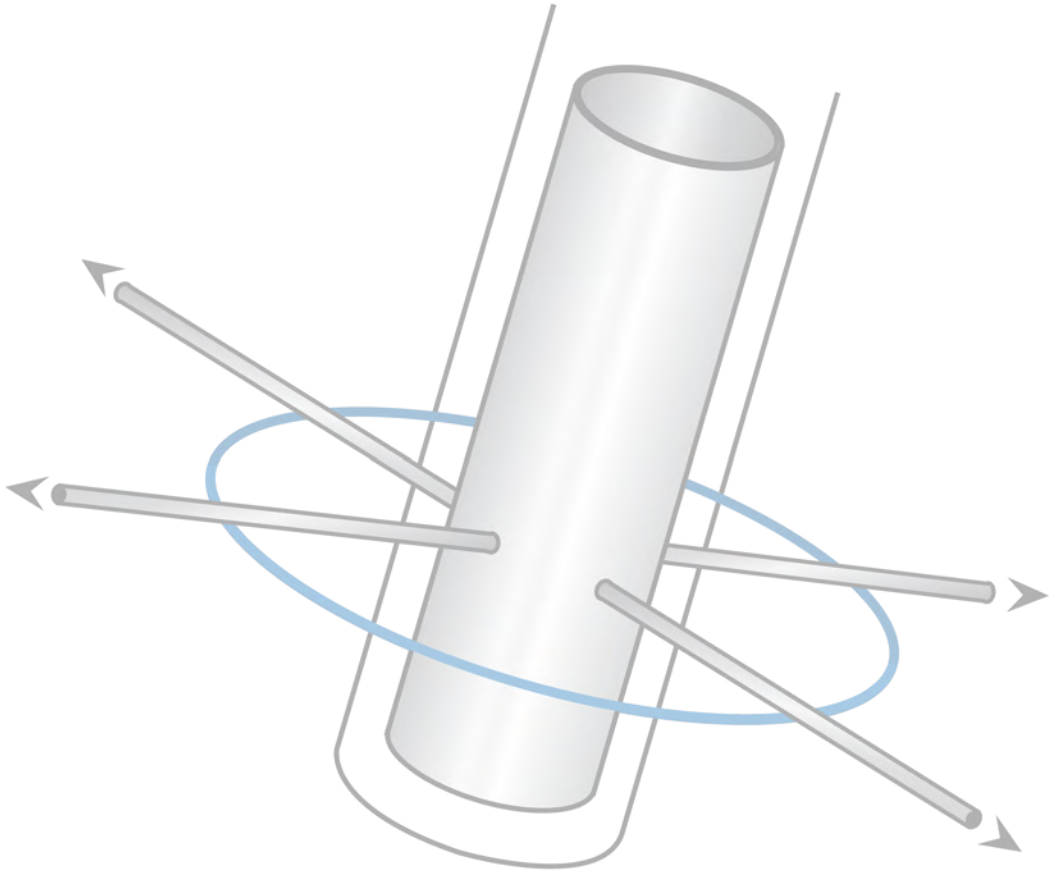

Recordkeeping

Effective recordkeeping of safety and health results is essential for tracking program performance. Additionally, OSHA requires specific recordkeeping of at-work injuries and illnesses that meet certain criteria.

Consequently, recordkeeping procedures have been established that apply to all Company operations. Company safety and health records, including recordkeeping as required by OSHA, are maintained at:

Radial Drilling Services, Inc.
4921 Spring Cypress Rd
Spring TX 77379

INJURY & ILLNESS DATA

The Human Resources Department will maintain records of all work-related Employee injuries and illnesses. This includes reports as required by state workers' compensation programs and insurance carriers.

The following OSHA records are applicable only to work-related injuries and illnesses that are deemed "recordable" in accordance with CFR 29 PART 1904, Recording and Reporting Occupational Injuries and Illness:

- OSHA 300 Log of Recordable Injuries and Illnesses;
- OSHA 301 Injury and Illnesses Incident Report or equivalent; and
- OSHA 300A Summary of Work-Related Injuries and Illnesses or equivalent.

The OSHA 300 Log, an Annual Log of Recordable Injuries and Illnesses, or an equivalent record, will be maintained at each job site for not less than five (5) years.

The OSHA 301 Injury and Illness Incident Report, or an acceptable equivalent, will be established bearing a case number correlating with the case identifier on the OSHA 300 Log and all pertinent and required information.

The information contained or entered on these records will be made current within six working days of a recordable incident.

A copy of the completed and signed OSHA 300 annual summary will be posted in each establishment in a conspicuous place or places where notices to Employees are customarily posted. The Company will ensure that the posted annual summary is not altered, defaced or covered by other material.

The completed and signed OSHA 300 annual summary will be posted no later than February 1 of the year following the year covered by the records. The posting will remain in place until April 30.

SAFETY/HEALTH INSPECTIONS & CONFIRMATIONS

The Company will review and maintain records of safety inspections and confirmations. These include:

- Safety inspections performed by in-house personnel, consultants and insurance loss control representatives; and
- Company self-inspection checklists.

Documentation will also show the date corrections were made or action(s) taken. These reports and all associated documentation will be maintained for record and periodic review to ensure hazard corrections and implemented recommendations are maintained.

A checklist will be developed as part of the periodic self-inspection process. This checklist will be utilized and completed including the name of the person performing the evaluation and the date the inspection takes place.

The self-inspection checklist will be reviewed by management and Supervisors upon completion. All discrepancies identified during the survey will be evaluated as soon as possible. The periodic self-inspection checklist will be reviewed and evaluated on a regular basis to ensure current applicability.

This review will be performed throughout the workplace with input from Supervisors and Employees of each work area. The checklist will be retained along with other applicable data for review.

The formal Accident Prevention Plan components will be reviewed annually to identify insufficiencies or component failure. Each component will be audited individually with the findings documented and recorded. This documentation will be utilized to identify trends in the Program element deficiency and to track improvement modifications. This documentation will be maintained for review.

SAFETY-RELATED MEETINGS

The Company will maintain records of in accordance with the Safety & Health Program. This includes applicable forms, logs and records contained in or required by the program. These records will be maintained by the Safety Coordinator.

TRAINING RECORDS

The Company will document and maintain records of safety and health related Employee training. This documentation will be maintained as proof of attendance and for review to assist
in determining the need for additional or recurring training for Employees on an individual basis.

ACCIDENT INVESTIGATION

The Company will maintain records and documentation of accident and incident investigations. Applicable forms and records include:

- Accident investigation forms and supporting data including photographs, drawings, diagrams, videotapes and audio-taped recordings; and
- Records of corrective action(s) or preventive measures implemented.

EQUIPMENT INSPECTION & MAINTENANCE

The Company will maintain records and data pertaining to equipment and maintenance programs performed at each workplace. Applicable forms and records are:

- Routine inspection and maintenance records;
- Documentation of services performed by contract agreement; and
- Documentation of repair and replacement of parts or equipment.

Periodic Review & Revision of Program Elements

At least annually, the Safety Coordinator, management and other designated Company personnel will review and revise the components of the *Accident Prevention Plan* and the *Safety & Health Program* for effective implementation.

Specific attention will be devoted to the introduction of new procedures, processes and equipment, as well as indications that a program component needs revision or updating.

Information for this review process will be solicited from Supervisors and Employees.

Safety Committee Functions & Duties

1. Management Commitment to Workplace Safety and Health

- Establish procedures for review and management's response to minutes.
- Submit written recommendations for safety/health improvement/ changes and response.
- Evaluate employer's safety/health policies and procedures.
- Respond in writing to safety committee recommendations.
- Review corrective action taken by management.

2. Committee Meetings and Employee Involvement

- Establish procedures for employee input, i.e. to receive suggestions, report hazards, and other pertinent safety and health information.
- Include employee input on agenda for safety committee meetings.
- Hold monthly meetings.
- Keep meeting minutes.
- Develop and make available a written agenda for each meeting.
- Take meeting minutes and distribute to management and the safety committee members.
- Include in the meeting minutes all recommendations.

3. Hazard Assessment and Control

- Establish procedures for workplace inspections to identify safety and health hazards.
- Assist the employer in evaluating the accident and illness prevention program.
- Appoint an inspection team of at least one employee representative and one employer representative.
- Conduct workplace inspections at least quarterly.
- Make a written report of hazards discovered during inspections.
- Review corrective measures. Make written recommendation to correct the hazard, and submit it to management for timely response.

Safety Committee Functions & Duties Cont.

4. Safety/Health Planning

- Establish procedures to review inspection reports and make appropriate implementation of new safety/health rules and work practices.

- Develop/establish procedures for an annual review of the company safety and health program.

5. Accountability

- Evaluate the company safety and health accountability program.
- Make recommendations to implement supervisor and employee account ability for safety and health.

6. Accident/Incident Investigations

- Establish procedures for reviewing reports completed for all safety incidents, including injury accidents, illnesses and deaths.
- Review these reports so that recommendations can be made for appropriate corrective action to prevent recurrence.

7. Safety/Health Training for Committee Members

- Identify and make accessible applicable OSHA standards and other codes that apply to your particular industry.
- Provide specific training on your type of business activity. Include at a minimum, hazard identification of the workplace and how to perform effective accident incident investigation.
- Identify the location of safety procedures provided with appropriate equipment and inform employees of their location.
- Recommend training for new employees and refresher training on company, department and work location safety practices, procedures and emergency response.
- Management should maintain (and make available to the safety committee) records on employee safety training.

Workplace Safety Committee Member

Chairperson

- Prepare agenda for next meeting
- Arrange for meeting place
- Notify members of meeting
- Arrange program
- Set time schedule for meeting
- Arrange all seating for members
- Review previous minutes and material for meeting
- Conduct meeting

Secretary

- Record minutes of meeting
- Distribute minutes to committee members
- Post minutes for other employees
- Report status of recommendations
- Assume chairperson's duties, if required

Members

- Report unsafe conditions and practices
- Attend all safety meetings
- Report all accidents or near misses
- Review injury accidents, illnesses and death investigations
- Contribute ideas and suggestions for improvement of safety
- Work safely
- Influence others to work safely
- Make or assist in inspection

Safety Committee

Charlie Guilbeau
Chairperson

Sheryl Muro
Secretary

Kip Tullier
Member

Paula Guilbeau
Member

SAFETY POLICY

SECTION 2

Radial Drilling Services, Inc.
(T) +1.281.374.7507
(F) +1.281.374.7509
web: www.radialdrilling.com
e-mail: info@radialdrilling.com

Safety Policy Table of Contents

CONTENTS

Radial Drilling Services Inc. Tel.: (281) 374-7507, Fax: (281) 374-7509, e-mail: *info@radialdrilling.com*

Safety Policy

I. OBJECTIVE

The Safety Policy of ***Radial Drilling Services, Inc.*** is designed to comply with the Standards of the Occupational Safety and Health Administration, and to endeavor to maintain a safe and injury/illness free workplace. A copy of the OSHA Safety and Health Standards 1926 and 1910 are available for all employees' use and reference. These Standards shall be available in the home office at all times and will be sent to the jobsite on request.

Compliance with the following Safety Policy and all items contained therein is mandatory for all employees of the company.

II. POLICY

It is company policy that accident prevention be a prime concern of all employees. This includes the safety and well being of our employees, subcontractors, and customers, as well as the prevention of wasteful, inefficient operations, and damage to property and equipment.

III. APPLICABILITY

This Safety Policy applies to all employees of Radial Drillings Services, Inc., regardless of position within the company. The Safety Rules contained herein apply to all subcontractors and anyone who is on a company project site.

Every employee is expected to comply with the Safety Policy, as well as OSHA Health and Safety Standards.

IV. IMPLEMENTATION

This Safety Policy supports five fundamental means of maximum employee involvement:

A. Management commitment to safety.
B. Weekly tool box safety meetings at all jobsites.
C. Effective job safety training for all categories of employees.
D. Job hazard analysis provided to all employees.
E. Audio and/or visual safety presentations given at jobsites by Supervisor.

V. ADMINISTRATION

The Safety Policy will be carried out according to guidelines established and published in this and other related procedures. Specific instructions and assistance will be provided by Management as requested. Each supervisor will be responsible for meeting all of the requirements of the Safety Policy, and for maintaining an effective accident prevention effort within his or her area of responsibility. Each supervisor must also ensure that all accidents are thoroughly investigated and reported to Management on the same day of the occurrence.

VI. REPORTING OF INJURIES

All employees will be held accountable for filling out a "Notice of Injury Form" immediately after an injury occurs, even if medical treatment is not required. (Notice must be made at or near the time of the injury and on the same day of the injury.) Employees must report the injury to their supervisor/leadman/foreman/superintendent/project manager, etc. A casual mentioning of the injury will not be sufficient. Employees must let their supervisor know:

A. How they think they hurt themselves.
B. What they were doing at the time.
C. Who they were working with at the time.
D. When and where it happened.
E. Other pertinent information that will aid in the investigation of the incident.

Failure to report an injury immediately (meaning at or near the time of the injury and on the same day of the injury) is a violation of the Safety Policy, and they may result in immediate termination, in accordance with company policy.

VII. NOTIFICATIONS

A. In Case of Serious Injury or Death

After the injured has been taken to the hospital, the leadman/foreman/supervisor shall notify the main office and ***Management*** as soon as possible. Statements from witnesses shall be taken. Statements are to be signed by witnesses and should include the time and date. Photographs of the area where the incident occurred and any other relevant items are to be taken.
Management will assist in the investigation.
The completed accident report form will sent to the main office.

B. In Case of Inspection by OSHA Inspector

The leadman/foreman/supervisor must notify ***Management*** that an OSHA Inspector is on the jobsite. It is the responsibility of all employees to make the inspector's visit on the jobsite as pleasant and timely as possible.

VIII. BASIC SAFETY RULES

A. Compliance with applicable federal, state, county, city, client, and company safety rules and regulations is a condition of employment.

B. All injuries, regardless of how minor, must be reported to your supervisor and the Safety Office immediately. An employee who fails to fill out a "Notice of Injury Form" and send it to the Safety Office can be issued a safety violation notice and may be subject to termination, in accordance with company policy. In the event of an accident involving personal injury or damage to property, all persons involved in any way will be required to submit to drug testing.

C. Hard hats will be worn by all employees on the project site at all times. The bill of the hard hat will be worn in front at all times. Alterations or modifications of the hat or liner is prohibited.

D. Safety glasses will be worn as the minimum-required eye protection at all times.
Additional eye and face protection such as mono-goggles and face shields are required for such operations as grinding, jack hammering, utilizing compressed air or handling chemicals, acids and caustics.

E. Fall Protection Requirements

1. Full body harnesses and lanyards shall be worn and secured any time there is a fall hazard of more than six (6) feet.
2. Lifelines shall be erected to provide fall protection where work is required in areas where permanent protection is not in place. Horizontal lifelines shall be a minimum of 1-inch diameter wire rope. Vertical lifelines shall be 3/4 inch manila rope or equivalent and shall be used in conjunction with an approved rope grab.
3. Structural steel erectors are required to "hook up" with full body harness and lanyard.
4. Employees using lanyards to access the work or position themselves on a wall or column, etc., must use an additional safety lanyard for fall protection.
5. Manlifts must be used properly. As soon as an employee enters an articulating boom lift and before the lift is started, the employee must put on the harness and attach the lanyard to the lift. Employees are not required to wear harnesses on scissor lifts.

F. Clothing must provide adequate protection to the body. Shirts must have at least a tee sleeve. Shirts with sleeves and long pants will be worn at all times. No shorts are to be worn on projects. All employees, except welders and burners, must tuck shirt tails inside trousers. Burners and welders will not be permitted to wear polyester or nylon clothing. Sturdy work boots with rigid, slip resistant soles are required.

No clogs, tennis shoes or loafers are permitted. Steel-toed tennis shoes with the ANSI label are the only alternative to the leather work boot.

G. All personnel will be required to attend safety meetings as stipulated by project requirements in order to meet OSHA Safety Standards.

H. Firearms, alcoholic beverages or illegal drugs are not allowed on company property or in company vehicles at any time. When drugs are prescribed by a physician, Management must be informed. The use or possession of illegal drugs or alcoholic beverages on the jobsite will result in immediate termination.

I. Housekeeping shall be an integral part of every job. Supervisors\ foremen\leadmen and employees are responsible for keeping their work areas clean and hazard-free. Clean up is required when a job is finished at the end of the day.

J. Burning and cutting equipment shall be checked daily before being used. Flash back arresters shall be installed at the regulators on both oxygen and LP bottles. All gas shall be shut off and hoses disconnected from bottles and manifolds at the end of the work day. Caps shall be replaced on bottles when gauges are removed. When gauges are removed and caps replaced, the oxygen and LP bottles shall be separated into storage areas no less than 20 feet apart with a “No Fire or Smoking” sign posted and a fire extinguisher readily available. Makeshift field repairs will not be allowed.

K. Drinking water containers are to be used for drinking water and ice only. Tampering with or placing items such as drinks in the water cooler will re sult immediate termination. The “common drinking cup” is not allowed. Only disposable cups will be used.

L. All tools whether company or personal, must be in good working condition. Defective tools will not be used. Examples of defective tools include chisels with mushroomed heads, hammers with loose or split handles, guards missing on saws or grinders, etc.

M. All extension cords, drop cords, and electrical tools shall be checked, properly grounded with ground fault interrupters (GFI’s), and color-coded by a designated competent person each month. This shall be part of the assured grounding program. Cords and equipment that do not meet requirements shall be immediately tagged and removed from service until repairs have been made.

N. “Horseplay” on the jobsite is strictly prohibited. Running on the jobsite is allowed only in extreme emergencies.

O. Glass containers or bottles of any kind are not permitted on jobsites or in company vehicles.

P. The jobsite speed limit is 10 MPH. No employee is permitted to ride in the bed of a truck standing up or sit on the outside edges of a truck. Employees must be sitting down inside the truck or truck bed when the vehicle is in motion. Riding as a passenger on equipment is prohibited unless the equipment has the safe capacity for transporting personnel.

Q. Adequate precautions must be taken to protect employees and equipment from hot work such as welding or burning. Fire extinguishing equipment shall be no further than 50 feet away from all hot work.

R. All scaffolding and work platforms must be built and maintained in accordance with OSHA specifications. All ladders must be in safe condition without broken rungs or split side rails. Damaged ladders shall be removed from service. Ladders shall be secured at the top and bottom and extend three (3) feet past the working surface. Metal ladders around electrical work are prohibited. A step ladder shall never be used as an extension ladder. A step ladder must only be used when fully opened with braces locked.

S. Crowfoot connections on air hoses shall be wired to prevent accidental disconnection. Compressed air shall not be used to dust off hands, face or clothing.

T. Report all unsafe conditions and near accidents to Management so corrective action can be taken.

U. All floor openings or excavations shall be barricaded on all sides to ensure employees are aware of the hazards. Floor holes shall be covered, with the covers secured and clearly marked.

V. Warning signs, barricades, and tags will be used to fullest extent and shall be obeyed.

W. All OSHA Safety Standards will be followed for job processes requiring respiratory protection. ***SEE RESPIRATORY PROTECTION PROGRAM.***

X. All OSHA Safety Standards will be followed during excavation. ***SEE EXCAVATION PROGRAM.***

Y. All OSHA Safety Standards will be followed for job processes requiring fall protection. ***SEE FALL PROTECTION PROGRAM.***

IX. ENFORCEMENT OF SAFETY POLICY

Safety violation notice(s) shall be issued to any employee, subcontractor, or anyone on the jobsite violating the safety rules or regulations by ***Management.***

A. Any violation of safety rules can result in suspension or immediate termination.

B. Any employee receiving three (3) written general violations within a six (6) month period shall be terminated.

C. Issuance of a safety violation notice for failure to use fall protection or for failure to report a job injury (at the time of the injury) may result in immediate termination, in accordance with company policy.

It is understood that ***Radial Drilling Services, Inc.*** is not restricting itself to the above rules and regulations. Additional rules and regulations as dictated by the job will be issued and posted as needed.

Attachment A Job Safety Checklist

The following Job Safety Checklist has been condensed and edited from the Occupational Safety and Health Act, Part 1926, Construction Safety and Health Regulations.

A. Safety Rules

_____ Hard hats and safety glasses worn.

_____ Shirts with sleeves worn.

_____ Work shoes worn.

_____ Subcontractors' personnel hold safety meetings as indicated by project requirements in accordance with OSHA Safety Standards.

_____ Work areas safe and clean.

_____ Safety mono-goggles/face shields worn whencircumstances warrant.

_____ Electrical cords and equipment properly grounded with GFI's in place and checked by a competent person.

_____ No use of alcoholic beverages or controlled substances.

_____ Subcontractors provide fall protection for their employees in accordance with OSHA Safety Standards.

_____ All scaffolds built to specifications as established by OSHA.

_____ Excavation/trenches sloped or shored as established by OSHA.

_____ Drug testing of employees involved in accident(s) resulting in personal injury or property damage.

B. Recordkeeping

_____ OSHA poster "Safety and Health Protection on the Job" posted.

_____ OSHA "200 Log or Occupational Injuries and Illnesses" posted during the month of February only.

_____ Hard hat sign posted in a conspicuous manner.

_____ Weekly safety meeting sign-in logs maintained in a folder with a copy forwarded to the main office weekly.

C. Housekeeping and Sanitation

_____ General neatness.

_____ Regular disposal of trash.

_____ Passageways, driveways, and walkways clear.

Attachment A Job Safety Checklist Cont.

_____ Adequate lighting.

_____ Oil and grease removed.

_____ Waste containers provided and used.

_____ Adequate supply of drinking water.

_____ Sanitary facilities adequate and clean.

_____ Adequate ventilation.

D. First Aid

_____ First aid stations with supplies and equipment. The expiration dates of supplies checked monthly. Expired supplies discarded.

_____ Trained first aid personnel.

_____ Injuries promptly and properly reported.

E. Personal Protective Equipment

_____ Hard hats.

_____ Hearing protection.

_____ Eye and face protection.

_____ Respiratory protection.

_____ Fall protection.

F. Fire Protection

_____ Fire extinguishers charged and identified.

_____ No Smoking signs posted.

_____ Flammable and combustible material storage area.

_____ Fuel containers labeled.

G. Hand and Power Tools

_____ Tools inspected.

_____ Power tools properly guarded.

_____ Safety guards in place.

Attachment A Job Safety Checklist Cont.

H. Electrical

_____ All portable tools and cords properly grounded [Ground Fault Interrupters (GFI's) properly installed].

_____ Daily visual inspection of caps, ends and cords for deformed or missing pins, insulation damage and internal damage.

_____ Tests of cords, tools and equipment for continuity and correct attachment of the equipment grounding connector (GFI) to the proper terminal made every month, and:

1. Prior to first use.
2. Prior to return to service after repairs.
3. Prior to return to service after incident that may have caused damage to cord or equipment.
4. Cords and equipment not meeting requirements immediately tagged and removed from service until repairs have been made.

I. Ladders

_____ Inspected at regular intervals.

_____ No broken or missing rungs or steps.

_____ No broken or split side rail.

_____ Extend at least 36 inches above landing and be secured.

_____ Side rails of 2 x 4 up to 16 feet, or 3 x 6 over 16 feet.

J. Motor Vehicles

_____ Lights, brakes, tires, horn, etc., inspected at regular intervals.

_____ No overloaded vehicles.

_____ Trash trucks have covers.

_____ No riding on the edge of pickup truck beds.

_____ No riding on concrete trucks, loaders, backhoes, etc.

_____ Functioning back-up alarms on loaders, tractors, backhoes, etc.

_____ Fire extinguishers installed and readily available.

_____ Seat belts worn at all times.

K. Material Storage and Handling

_____ Material at least two (2) feet from edge of excavation site.

_____ Proper temperature and moisture levels for safe storage of materials to prevent deterioration or volatile hazards within the storage area.

_____ Inventory maintained and inspected frequently.

_____ Proper protective gear worn when handling chemicals.

_____ Single post shores braced horizontally.

L. Use of Cranes and Derricks

Prohibition of the use of cranes or derricks to hoist employees on a personal platform except in the situation where no safe alternative is possible.

Attachment B Safety Equipment Checklist

The following is a list of Safety Equipment that should be on the job, if required, or available from ***Management*** at all times. Equipment should be checked at intervals in accordance with the applicable OSHA Safety Standards by the Superintendent to ensure that all required equipment is present and in good condition.

_____ Hard hats and safety glasses worn.

_____ Safety goggles, shields, and glasses.

_____ Hearing protection.

_____ Respirators.

_____ Hard hats.

_____ Fire extinguishers (properly charged).

_____ First aid kit (check list inside kit).

_____ Stretcher or stroke litter (tool room).

_____ Welding masks and goggles.

_____ Storage racks for compressed gases.

_____ Guards on all power tools.

_____ Trash barrels.

_____ OSHA forms posted.

_____ Company “Safety Policy” packet posted.

_____ Company “Hazardous Communication Program” packet posted.

_____ Emergency vehicle (vehicle designated to carry injured to hospital).

Attachment C Safety Meeting Report

A safety meeting report is signed to indicate attendance. The form has room for employees to sign after attending their weekly safety meeting. This form shall be filled out for each jobsite safety meeting that is held. After completion of the form, make a copy to maintain at each jobsite and return the signed original copy to the main office.

Safety Meeting Date: _____

Topic: _____

Safety Meeting Conducted By: _____

Employee Name (printed)	**Employee Signature**	**Job Title**

Attachment D Employee Acknowledgment

I state that I have attended the safety orientation, and have read and received a copy of the ***Radial Drilling Services, Inc.*** safety rules and regulations.

I further state that I understand these rules and acknowledge that compliance with the safety rules and regulations is a condition of employment. If I violate the safety rules or fail to report an injury to my supervisor immediately, I understand that I am subject to termination, in accordance with company policy.

_____
Employee Signature

_____
Employee Printed Name

_____
Date

_____
Signature

_____
Date

cc: Supervisor

ENVIRONMENTAL POLICY

SECTION 3

Radial Drilling Services, Inc.
(T) +1.281.374.7507
(F) +1.281.374.7509
web: www.radialdrilling.com
e-mail: info@radialdrilling.com

CONTENTS

Section 3 – Environmental Policy

1. ENVIRONMENTAL POLICY

Radial Drilling Services, Inc. will:

- Carry out all its present and future business and operations in a manner that avoids, reduces, or controls any adverse effects on the environment.
- Operate within standards required by environmental law, regulations or codes of practices;
- Effectively use resources by making efficient use of energy and raw materials;
- Will educate, train and motivate our employees to carry out their task in an environmentally friendly manner;
- Operate an Environmental Management System (EMS) to international standards and will periodically conduct environmental audits; and
- Set objectives, targets and action plans to ensure continual environmental improvement.

Radial Drilling Services, Inc aims to:

- Operate to standards, wherever practicable, higher that those required by law, regulations or codes of practices; and
- Carry out day-to-day business and operations in a manner, wherever practicable, which minimizes any adverse effect on the environment.

Environmental Policy

Radial Drilling Services, Inc. objectives are to:

- Make environmental management a high corporate priority and to integrate policies, programs and practices as essential elements of management;
- Establish an Environmental Management system complementary to international standards;
- Conduct regular performance reviews and act on the results to ensure compliance with appropriate laws and policy;
- Produce an environmental manual setting out policy, objectives and standards;
- Provide adequate resources, staff and training so that employees at all levels recognize and are able to fulfill their responsibilities;
- Review and take account of the environmental implications of all activities and plan and conduct the design, development operation and eventual closure of facilities in a manner that optimizes and economic use of resources while reducing and adverse effects on the environment and local community;
- Develop, maintain and test emergency procedures in conjunction with the relevant authorities;
- Seek to conserve resources by making the most efficient use of energy and raw materials;
- Promote and maintain open dialogue with the local community to ensure appropriate response to their needs and concerns; and
- Support research and development, directly and indirectly, of scientific knowledge aimed at the improvement of all aspects of environmental performance.

2. SPILL CONTROL

2.1 ON SITE WASTE MANAGEMENT:

Radial Drilling Services, Inc. will be provided, on location, a means for the disposal of well returns by the customer. Our units are prepared to divert returns from the well-head to the location of our customer's choice. The units carry a variety of hoses and pumps ready to adapt to most situations.

Radial Drilling Services, Inc's Mobile Drilling Units are self -contained units and require no method for waste disposal. In the event of a small spill or unforeseen waste each unit does carry emergency clean up equipment. The following equipment is carried with the RDS unit.

1. Emergency Spill Kit
2. Sythetic absorbent pads
3. Absorbent rags
4. Trash bags and barrel
5. Clean containment buckets
6. Transfer pump
7. Transfer Pump
8. Shovels
9. PH tester
10. Protective cleaning gear

QUALITY ASSURANCE POLICY

SECTION 4

Radial Drilling Services, Inc.
(T) +1.281.374.7507
(F) +1.281.374.7509
web: www.radialdrilling.com
e-mail: info@radialdrilling.com

CONTENTS

Section 4 – Quality Assurance Policy

Quality Assurance Policy

We at Radial Drilling Services, Inc. strive for perfection in everything we do; the cornerstone of our success has been to adapt our licensed method of radial drilling to fit the needs of each of our customers. Our objective in assuring unmatched quality is to understand that our customers require first class work to be done, because precise attention to detail increases profitability for each customer's specific needs so that we can provide excellent service the first time. Quality assurance is just one of the many values that we instill in all of our employees.

PERSONAL PROTECTIVE EQUIPMENT

SECTION 5

Radial Drilling Services, Inc.
(T) +1.281.374.7507
(F) +1.281.374.7509
web: www.radialdrilling.com
e-mail: info@radialdrilling.com

CONTENTS

Section 5 – Personal Protective Equipment Policy

Radial Drilling Services Inc. Tel.: (281) 374-7507, Fax: (281) 374-7509, e-mail: *info@radialdrilling.com*

5 HAZARD ASSESSMENT AND SELECTION

a) Selection of PPE will be based on Company supervision's written assessment of the hazards associated with the job site and the recommendations included on the safe work permit provided by the host employer or general contractor.

b) Prior to the beginning of any job task, Company supervision will determine the PPE necessary to safeguard the employees assigned to do the work. When the job task is complicated in nature the Site Supervisor and the host employer or general contractor safety representative will be consulted for their expertise in determining the proper PPE for the task.

c) Company supervision will ensure that the PPE is available and is included on the work permit. The information on the permit will be discussed with the crew assigned to do the work.

d) When reviewing the scope of work prior to the commencement of the job, Company supervision will assess the hazards associated with the work and its environment. This assessment will be distributed to the Site Safety Supervisor/Representative to determine the needs of the job.

e) PPE determined for the job will be verbally communicated to the employees during a tool box safety meeting prior to the commencement of the job.

f) The PPE selected shall be of the types that will protect the affected employee from the hazards identified in the hazard assessment, fitted to the employee as needed to be effective, and with PPE ordered in various sizes and types to accommodate a variety of individuals who may be assigned work.

6 DEFECTIVE AND DAMAGED EQUIPMENT

a) Defective or damaged equipment shall not be used.

b) When PPE is removed for disposal it will be tagged as such, if not disposed of immediately.

7 TRAINING

a) The Company will provide training to each employee who is required to use PPE. Each such employee shall be trained to know at least the following:

- When PPE is necessary;
- What PPE is necessary;
- How to properly don, doff, adjust, and wear PPE;
- The limitations of the PPE; and,
- The proper care, maintenance, useful life and disposal of the PPE.

Personal Protective Equipment Policy

Applicable OSHA Standard: 29 CFR 1910 Subpart I

1 PURPOSE & SCOPE

Protective equipment, including personal protective equipment for eyes, face, head, and extremities, protective clothing, respiratory devices, and protective shields and barriers, shall be provided, used, and maintained in a sanitary and reliable condition wherever it is necessary by reason of hazards of processes or environment, chemical hazards, radiological hazards, or mechanical irritants en countered in a manner capable of causing injury or impairment in the function of any part of the body through absorption, inhalation or physical contact.
This policy applies to all employees and subcontractors at work locations that are controlled by Radial Drilling Services, Inc.

2 APPLICATION

a) Controlling hazards. PPE devices alone should not be relied on to provide protection against hazards, but should be used in conjunction with guards, engineering controls, and sound manufacturing practices.

b) The Company will provide employees with the proper protective equipment (PPE) for use in their specific tasks.

c) This PPE includes, but is not limited to, eyes, face, head, respiratory system, and extremities.

d) The PPE will be maintained and stored in accordance with the manufacturer's recommendations.

3 EMPLOYEE-OWNED EQUIPMENT

a) Where employees provide their own protective equipment, the Site Supervisor shall be responsible to assure its adequacy, including proper maintenance, and sanitation of such equipment.

4 DESIGN

a) All PPE shall meet OSHA/NIOSH standards and approval.

b) Where a standard may not apply a competent person will analyze the equipment and give approval or disapproval for its use.

5 HAZARD ASSESSMENT AND SELECTION

a) Selection of PPE will be based on Company supervision's written assessment of the hazards associated with the job site and the recommendations included on the safe work permit provided by the host employer or general contractor.

b) Prior to the beginning of any job task, Company supervision will determine the PPE necessary to safeguard the employees assigned to do the work. When the job task is complicated in nature the Site Supervisor and the host employer or general contractor safety representative will be consulted for their expertise in determining the proper PPE for the task.

c) Company supervision will ensure that the PPE is available and is included on the work permit. The information on the permit will be discussed with the crew assigned to do the work.

d) When reviewing the scope of work prior to the commencement of the job, Company supervision will assess the hazards associated with the work and its environment. This assessment will be distributed to the Site Safety Supervisor/Representative to determine the needs of the job.

e) PPE determined for the job will be verbally communicated to the employees during a tool box safety meeting prior to the commencement of the job.

f) The PPE selected shall be of the types that will protect the affected employee from the hazards identified in the hazard assessment, fitted to the employee as needed to be effective, and with PPE ordered in various sizes and types to accommodate a variety of individuals who may be assigned work.

6 DEFECTIVE AND DAMAGED EQUIPMENT

a) Defective or damaged equipment shall not be used.

b) When PPE is removed for disposal it will be tagged as such, if not disposed of immediately.

7 TRAINING

a) The Company will provide training to each employee who is required to use PPE. Each such employee shall be trained to know at least the following:

- When PPE is necessary;
- What PPE is necessary;
- How to properly don, doff, adjust, and wear PPE;
- The limitations of the PPE; and,
- The proper care, maintenance, useful life and disposal of the PPE.

b) Each affected employee shall demonstrate an understanding of the training specified in 6.1, and the ability to use PPE properly, before being allowed to perform work requiring the use of PPE.

c) When Company supervision has reason to believe that any affected employee who has already been trained does not have the understanding and skill required, the employee shall be retrained. Circumstances where retraining is required include, but are not limited to, situations where:

- Changes in the workplace render previous training obsolete; or
- Changes in the types of PPE to be used render previous training obsolete; or inadequacies in an affected employee's knowledge or use of assigned PPE indicate that the employee has not retained the requisite understanding or skill.

d) Company supervision shall verify that each affected employee has received and understood the required training through a written certification that contains the name of each employee trained, the date(s) of training, and that identifies the subject of the certification.

8 EYE AND FACE PROTECTION

a) The minimum eye protection allowed outside of an office area is ANSI (Z.87.1-1989) approved side shield safety glasses.

b) Contact lenses are not allowed at work areas unless approved in writing by management.

c) Supervisors and the host employer or general contractor will determine what tasks require other eye protection, such as chemical goggles and face shields.

d) Eye and face PPE shall be distinctly marked to facilitate identification of the manufacturer.

e) Goggles that can be worn over corrective spectacles without disturbing the adjustment are acceptable.

f) Employees SHALL wear their eye protection to adequately protect themselves from hazards in the work area.

g) Questions about eye protection should be brought to your supervisor and resolved before the job is started. Special protection concerns should also be discussed with your supervisor.

h) All face and eye protection equipment shall be kept clean and in good repair.

i) Full-face shields are required to be worn over side shield safety glasses or chemical goggles for grinding and chipping and any other designated assignment.

9 HEAD PROTECTION

a) Approved hard hats (ANSI-Z89.1-1986) in good condition are required. Protective helmets designed to reduce electrical shock hazard shall be worn by each affected employee when near exposed electrical conductors which could contact the head (ANSI -Z89.2-1971). Metal hard hats shall not be worn.

b) Hard hats shall be worn in work areas where there is a potential for injury to the head from falling or flying objects.

10 HAND PROTECTION

a) Radial Drilling Services, Inc. will select and require employees to use appropriate hand protection when employee's hands are exposed to hazards such as those from skin absorption of harmful substances, severe cuts or lacerations, severe abrasions, punctures, chemical burns, thermal burns, and harmful temperature extremes.

b) The selection of the appropriate hand protection will be based on an evaluation of the performance characteristics of the hand protection relative to the task(s) to be performed, conditions present, duration of use and the hazards and potential hazards identified.

c) All field employees should obtain work gloves suitable for the work they will perform. Gloves shall be worn when required.

11 FOOT PROTECTION

a) Each affected employee shall wear protective footwear when working in areas where there is a danger of foot injuries due to falling and rolling objects, or objects piercing the sole and where such employee's feet are exposed to electrical hazards.

b) Protective footwear need comply with (ANSI Z41-1991). Steel-toed hoes are required on most job sites. The Company requires the wearing of steel-toed shoes for anyone in the field with the exception of office personnel who are restricted to operations off of job sites.

12 ASSESSMENT GUIDELINES

a) Conduct a walk-through survey of the areas in question. The purpose of the survey is to identify sources of hazards to workers and co-workers. Consideration should be given to the basic hazard categories:

- Impact
- Penetration
- Compression (roll-over)
- Chemical
- Heat

- Harmful dust
- Light (optical) radiation

b) During the walk-through survey the Site Supervisor should observe:

- Sources of motion; i.e., machinery or processes where any movement of tools, machine elements or particles could exist, or movement of personnel that could result in collision with stationary objects;
- Sources of high temperatures that could result in burns, eye injury or ignition of protective equipment, etc.;
- Types of chemical exposures;
- Sources of harmful dust;
- Sources of light radiation, i.e., welding, brazing, cutting, furnaces, heat treating, high intensity lights, etc.;
- Sources of falling objects or potential for dropping objects;
- Sources of sharp objects which might pierce the feet or cut the hands;
- Sources of rolling or pinching objects which could crush the feet;
- Layout of workplace and location of co-workers; and
- Any electrical hazards.

c) In addition, injury/accident data should be reviewed to help identify problem areas.

d) Following the walk-through survey, it is necessary to organize the data and information for use in the assessment of hazards. The objective is to prepare for an analysis of the hazards in the environment to enable proper selection of protective equipment.

e) Having gathered and organized data on a workplace, an estimate of the potential for injuries should be made. Each of the basic hazards should be reviewed and a determination made as to the type, level of risk, and seriousness of potential injury from each of the hazards found in the area. The possibility of exposure to several hazards simultaneously should be considered.

13 SELECTION GUIDELINES

f) After completion of the hazard assessment (see 11 above), the general procedure for selection of protective equipment is to:

- Become familiar with the potential hazards and the type of protective equipment that is available, and what it can do; i.e., splash protection, impact protection, etc.
- Compare the hazards associated with the environment; i.e., impact velocities, masses, projectile shape, radiation intensities, with the capabilities of the available protective equipment.

- Select the protective equipment which ensures a level of protection greater than the minimum required to protect employees from the hazards.
- Fit the user with the protective device and give instructions on care and use of the PPE. It is very important that end users be made aware of all warning labels for and limitations of their PPE.

14 SELECTION CHART GUIDELINES FOR EYE AND FACE PROTECTION

The crafts and occupations associated with roofing installation, carpentry, welding and most construction activities generally require eye protection. The following chart provides general guidance for the proper selection of eye and face protection to protect against hazards associated with the listed hazard "source" operations.

Source	Assessment of Hazard	Protection
IMPACT - Chipping, grinding machining, masonry work, wood-working, sawing, drilling, chiseling, powered fastening, riveting, and sanding.	Flying fragments, objects, large chips, particles sand, dirt, etc.	Flying fragments, objects, large chips, particles sand, dirt, etc.
HEAT-Furnace operations, pouring, casting, hot dipping, and welding.	Hot sparks Splash from molten metals High temperature exposure	Faceshields, goggles, spec-tacles with side protec-tion For severe exposure use faceshield. Faceshields worn over goggles. Screen face shields, reflective face shields.
CHEMICALS-Acid and chemicals handling, degreasing plating.	Splash Irritating mists	Goggles, eyecup and cover types. For severe exposure, use face shield. Special-purpose goggles.
DUST - Woodworking, buffing, general dusty conditions.	Nuisance dust	Goggles, eyecup and cover types.
LIGHT and/or RADIATION - Welding: Electric arc	Optical radiation	Welding helmets or welding shields. Typical shades: 10-14. Continued on next page
Welding: Gas	Optical radiation	Welding goggles or welding face shield. Typical shades: gas welding 4-8, cutting 3-6, brazing 3-4.

Cutting, Torch brazing, Torch soldering	Optical radiation	Spectacles or welding face-shield. shades, 1.5-3.
Glare	Poor vision	Spectacles with shaded or special-purpose lenses, as suitable.

15 SELECTION GUIDELINE FOR HEAD PROTECTION

a) All head protection (helmets) is designed to provide protection from impact and penetration hazards caused by falling objects. Head protection is also available which provides protection from electric shock and burn. When selecting head protection, knowledge of potential electrical hazards is important.

- Class A helmets, in addition to impact and penetration resistance, provide electrical protection from low-voltage conductors (they are proof tested to 2,200 volts).
- Class B helmets, in addition to impact and penetration resistance, provide electrical protection from high-voltage conductors (they are proof tested to 20,000 volts).
- Class C helmets provide impact and penetration resistance (they are usually made of aluminum which conducts electricity), and should not be used around electrical hazards.

b) Where falling object hazards are present, helmets must be worn. Some examples include: working below other workers who are using tools and materials which could fall; working around or under conveyor belts which are carrying parts or materials; working below machinery or processes which might cause material or objects to fall; and working on exposed energized conductors.

16 SELECTION GUIDELINES FOR FOOT PROTECTION

c) Safety shoes and boots which meet the ANSI Z41-1991 Standard provide both impact and compression protection. Where necessary, safety shoes can be obtained which provide puncture protection. In some work situations, metatarsal protection should be provided, and in other special situations electrical conductive or insulating safety shoes would be appropriate.

d) Safety shoes or boots with impact protection would be required for carrying or handling materials such as lumber, metal construction components and parts, or heavy tools -- any of which could be dropped; and for other activities in which objects might fall onto the feet.

Safety shoes or boots with compression protection would be required for work activities involving manual material handling, around heavy pipes, tools or components at a well site and similar at-work situations – any of which could potentially injure an employee's feet.

17 SELECTION GUIDELINES FOR HAND PROTECTION

a) Gloves are often relied upon to prevent cuts, abrasions, burns, and skin contact with chemicals that are capable of causing local or systemic effects following dermal exposure. OSHA is unaware of any gloves that provide protection against all potential hand hazards, and commonly available glove materials provide only limited protection against many chemicals.

Therefore, it is important to select the most appropriate glove for a particular application and to determine how long it can be worn, and whether it can be reused.

b) It is also important to know the performance characteristics of gloves relative to the specific hazard anticipated; e.g., chemical hazards, cut hazards, flame hazards, etc. These performance characteristics should be assessed by using standard test procedures.

Before purchasing gloves, the employer should request documentation from the manufacturer that the gloves meet the appropriate test standard(s) for the hazard(s) anticipated. Other factors to be considered for glove selection in general include:

- As long as the performance characteristics are acceptable, in certain circumstances, it may be more cost effective to regularly change cheaper gloves than to reuse more expensive types; and,
- The work activities of the employee should be studied to determine the degree of dexterity required, the duration, frequency, and degree of exposure of the hazard, and the physical stresses that will be applied.

c) With respect to selection of gloves for protection against chemical hazards:

- The toxic properties of the chemical(s) must be determined; in particular, the ability of the chemical to cause local effects on the skin and/or to pass through the skin and cause systemic effects;
- Generally, any “chemical resistant” glove can be used for dry powders;
- For mixtures and formulated products (unless specific test data are available), a glove should be selected on the basis of the chemical component with the shortest breakthrough time, since it is possible for solvents to carry active ingredients through polymeric materials; and,
- Employees must be able to remove the gloves in such a manner as to prevent skin contamination.

HAZARD COMMUNICATION PROGRAM

SECTION 6

Radial Drilling Services, Inc.
(T) +1.281.374.7507
(F) +1.281.374.7509
web: www.radialdrilling.com
e-mail: info@radialdrilling.com

CONTENTS

Section 6 – Hazard Communication Program

Radial Drilling Services Inc. Tel.: (281) 374-7507, Fax: (281) 374-7509, e-mail: *info@radialdrilling.com*

Hazard Communication Program

Applicable OSHA Standard: 29 CFR 1910.1200, 1926.59

1 PURPOSE & SCOPE

a) The purpose of this program is to ensure that the hazards of all chemicals produced or imported are evaluated, and that information concerning their hazards is transmitted to Radial Drilling Services, Inc. and its employees.

b) This program applies to any chemical which is known to be present in any Radial Drilling Services, Inc. workplace in such a manner that employees may be exposed under normal conditions of use or in a foreseeable emergency.

2 GENERAL REQUIREMENTS

a) The following written Hazard Communication Program is to be implemented for personnel of Radial Drilling Services, Inc. Information about this program, any hazardous chemicals at their work location and training about the program shall be provided to employees prior to work assignment. This program shall be reviewed when new processes or work assignments require changes or updating, and at least annually to be changed or updated as required.

b) The company Safety Coordinator will be responsible for ensuring the program is current and enforced. The Site Supervisor is responsible for ensuring that the program is effectively implemented at the supervisor's work location.

c) A copy of this program shall be made available to an employee(s) upon hiring. Copies may also be obtained on written request from an employee or a designated representative. Requested copies shall be provided in a timely manner. This program shall also be available to the Assistant Secretary of Labor for Occupational Safety and Health, U.S. Department of Labor, or designee, and the Director, National Institute for Occupational Safety and Health, U.S. Department of Health and Human Services, or designee.

d) The company Safety Coordinator will be contacted when a copy of the program is needed.

e) The program will be updated when new chemicals or hazards are introduced into the working environment, and reviewed annually.

f) Material Safety Data Sheets shall be required at the time that any chemical product for use in the company workplace is purchased and obtained upon receipt of the chemical product.

g) Specific operations in the company workplace where hazardous chemicals are used include:

   i) vehicle, tools and equipment operations requiring use of fuels and lubricants

   ii) use of a chemical product at the well site, either by Company or host employer personnel, in a manner that exposes Company personnel to the product

   iii) welding and hot work where welding rods, solders and other chemical products are required for hot work processes

h) A Right To Know Station shall be established at each Company work location. The station shall be prominently displayed at a place where all employees in the area will have immediate and ready access to station contents for information and in case of emergency.

   A copy of the company's written Hazard Communication Program, a Chemical Inventory listing all chemicals authorized by the company for use at the work location, and current copies of the Material Safety Sheet (MSDS) for each chemical product listed in the Chemical Inventory shall be maintained at the station.

   A master Right To Know Station shall also be maintained at the corporate office and shop facility to employees, their designated representatives, the Assistant Secretary and the Director in accordance with the requirements of 29 CFR 1910.1020(e).

i) Supervisors and other company employees at a work location shall be constantly aware of signs and indications of a potential spill or some other accidental release of chemical product in the workplace. Generally, chemical spills and release are noticed visually by observation or because an odor suspected to be from a chemical is noticed. Any such suspicion shall be reported to the Site Supervisor immediately so that emergency response, containment and proper clean-up can be accomplished. Industrial hygiene monitoring and monitoring devices operated by qualified personnel shall also be used as required to detect the presence of chemicals, fumes and vapors.

j) The program will be updated when new chemicals or hazards are introduced into the working environment, and reviewed annually.

k) Supervisors and employees shall be aware of the physical and health hazards of chemicals present in the work location through thorough review of MSDS.

l) MSDS and container labeling shall also be the primary reference information about: preventing exposures; safe work practices; proper selection and use of PPE for working with a chemical product; safe storage of chemical products; properties of the chemical product; emergency and containment/clean-up procedures in the event of a spill or release; and other types of information that is contained in an MSDS.

3 CONTAINER LABELING

a) The Site Supervisor will be responsible for all containers of hazardous chemicals entering the workplace and will assure that the chemical containers are properly labeled with:

   i) chemical name, including product name and identity of the chemical;

   ii) hazard warnings about the chemical;

   iii) name and address of the manufacturer, importer, or responsible party; and HMIS® Labeling System

   iv) HMIS® labels properly marked (see sample tag at right)

b) Chemical containers other than the original product container shall be checked and approved by the Site Supervisor or a competent person and the MSDS reviewed to ensure the safety of the alternate container. The Site Supervisor shall ensure that the new container is properly labeled; i.e., that all secondary containers are labeled with an extra copy of the original manufacturer's label or with generic labels which have a block for identity and blocks for the hazard warning. For help with labeling, employees shall contact the Site Supervisor and, if additional assistance is required, the company's Safety Coordinator. The company Safety Coordinator shall re view the labeling system annually as part of the annual review of this Hazard Communication Program and update as required.

c) The Site Supervisor will ensure that the contents of piping, gas and tran mission lines are properly identified. The Site Supervisor will also inform employees of the hazards associated with chemicals contained in piping within the work areas.

d) Company employees shall not remove or deface chemical product labeling.

e) Chemical product labeling shall be in English. At the same time, if employees on the work location do not speak English as their primary language, the information provided in labeling shall be provided to these employees in their primary language.

3 CONTAINER LABELING

a) The Site Supervisor will be responsible for all containers of hazardous chemicals entering the workplace and will assure that the chemical containers are properly labeled with:

i) chemical name, including product name and identity of the chemical;

ii) hazard warnings about the chemical;

iii) name and address of the manufacturer, importer, or responsible party; and HMIS® Labeling System

iv) HMIS® labels properly marked (see sample tag at right)

b) Chemical containers other than the original product container shall be checked and approved by the Site Supervisor or a competent person and the MSDS reviewed to ensure the safety of the alternate container. The Site Supervisor shall ensure that the new container is properly labeled; i.e., that all secondary containers are labeled with an extra copy of the original manufacturer's label or with generic labels which have a block for identity and blocks for the hazard warning. For help with labeling, employees shall contact the Site Supervisor and, if additional assistance is required, the company's Safety Coordinator. The company Safety Coordinator shall review the labeling system annually as part of the annual review of this Hazard Communication Program and update as required.

c) The Site Supervisor will ensure that the contents of piping, gas and tran mission lines are properly identified. The Site Supervisor will also inform employees of the hazards associated with chemicals contained in piping within the work areas.

d) Company employees shall not remove or deface chemical product labeling.

e) Chemical product labeling shall be in English. At the same time, if employees on the work location do not speak English as their primary language, the information provided in labeling shall be provided to these employees in their primary language.

4 MATERIAL SAFETY DATA SHEETS (MSDSs)

a) The corporate office or Site Supervisor, whichever is in charge of purchasing a chemical product, will be responsible for obtaining an MSDS for each product. The Site Supervisor will maintain the MSDS system at the work location. The Site Supervisor will review incoming data sheets for new and significant health/safety information and will ensure that the new information is given to the affected employees. Copies of all MSDS will be kept by the Site Supervisor with copies displayed at the Right To Know Station at the location. The Site Supervisor and Safety Coordinator will re view each MSDS annually for accuracy and completeness.

b) The MSDS system shall include:

i) current master inventory list of all MSDSs indexed alphabetically and by vendor;

ii) the identity used on the MSDS shall be the same as used on the container label;

iii) the chemical and common name of all ingredients determined to present a hazard shall appear on all MSDS;

iv) the MSDS shall list:

(1) the physical and chemical characteristics of the chemical including vapor pressure, flash point, etc.;

(2) the fire, explosion, and reactivity hazard(s) of the chemical mixture including the boiling point, flash point and auto ignition temperature;

(3) health hazards of the chemical mixture including signs and symptoms of exposure and medical conditions recognized as aggravated by exposure with primary route(s) of entry;

(4) permissible exposure limit (PEL) or any other exposure limit used or recommended by the manufacturer, importer, or employer;

(5) whether on carcinogen listing (NTP) or has been found to be a potential carcino gen (IARC listing) or by OSHA (see Appendix A immediately following this program

(6) control measures including fire, engineering, personal protective equipment;

(7) general precautions for safe handling and use including protective measures during repair and maintenance and procedures for clean-up of spills and leaks;

(8) emergency and first aid procedures;

(9) date prepared or changed;

(10) name, address, telephone numbers of manufacturer, importer, or responsible party to call in an emergency.

c) The MSDS will be available for use by employees. Each Site Supervisor will keep a current and up-to-date copy of the program on file and in the location's Right To Know Station. New chemicals shall not be used until a MSDS has been obtained and reviewed for health hazards by the Site Supervisor.

5 EMPLOYEE TRAINING AND EDUCATION

a) Before starting work, the respective Site Supervisor of a new employee will go over their copy of the plan and each MSDS applicable to their job, i.e. handouts, video tapes, etc.

Before any new chemical is used, all effected employees will be informed of its use, will be instructed on safe use, and will be trained on hazards associated with the new chemical.

All employees will attend additional training, as appropriate, to review the program and MSDS. Appropriate reference material will also be discussed during the training session(s).

b) The minimum orientation and training for a new employee is as follows:

i) an overview of the requirements contained in the Hazard Communication standard, 29 CFR 1926.59;

ii) chemicals present in their workplace operations and this office;

iii) location and availability of the written program;

iv) physical and health effects of the hazardous chemicals listed on the inventory list of this program;

v) methods and observation techniques used to determine the presence or release of hazardous chemicals in the work area;

vi) how to lessen or prevent exposure to these hazardous chemicals through usage of control/work practices and personal protective equipment;

vii) steps taken by Radial Drilling Services, Inc., to lessen or prevent exposure to the chemicals listed on the inventory list;

viii) emergency procedures to follow if exposed to any chemicals; and

ix) location of MSDS file and location of hazardous chemicals inventory list.

c) Prior to a new chemical being introduced into any section of the workplace, each employee will be given information and training as outlined above by the Site Supervisor. MSDS must be available prior to use.

d) After attending the training class, each employee will sign a form to verify that he/she attended the training, that the written plan is made available for review, and that he/she understands the plan.

e) Before entering a job site, the Site Supervisor will ascertain what hazards employees may be exposed to and then take appropriate action to protect the employees. If the employee has any question about what protection is needed, he/she should contact the Site Supervisor or company Safety Coordinator immediately.

6 NON-ROUTINE TASKS

a) Before any non-routine task is performed, employees shall be advised and/or they must contact the Site Supervisor for special precautions to follow and the supervisor shall inform any other personnel who could be exposed. Non-routine task situations include unlabeled pipes, gas and transmission lines at the work location.

b) In the event that such tasks are required, the Site Supervisor shall provide the following information about such activity as it relates to the specific chemicals expected to be encountered:

i) specific chemical name(s) and hazard(s);

ii) protective personal equipment required and safety measures to be taken;

iii) measures that have been taken to lessen the hazards including ventilation, respirators, presence of other employee(s), and emergency procedures.

7 MULTI-EMPLOYER WORKPLACES

a) Employers who produce, use, or store hazardous chemicals at a workplace in such a way that the employees or other employer(s) may be exposed (for example, employees of a contractor working on-site) shall additionally ensure that the hazard communication programs developed and implemented under this paragraph (e) include the following:

i) The methods the employer will use to provide the other employer(s) on-site access to material safety data sheets for each hazardous chemical the other employer(s)' employees may be exposed to while working;

ii) The methods the employer will use to inform the other employer(s) of any precautionary measures that need to be taken to protect employees during the workplace's normal operating conditions and in foreseeable emergencies; and,

iii) The methods the employer will use to inform the other employer(s) of the labeling system used in the workplace.

8 OTHER PERSONNEL EXPOSURE (CONTRACTORS AND SUBCONTRACTORS)

a) It will be the responsibility of the Site Supervisor or Safety Coordinator to provide other personnel or outside contractors with the following information as follows:

   i) hazardous chemicals to which they may be exposed to while in the workplace;

   ii) measures to lessen the possibility of exposure;

   iii) location of MSDS for all hazardous chemicals; and

   iv) procedures to follow if they are exposed.

b) The Site Supervisor or Safety Coordinator will also be responsible for contacting each contractor before work is started to gather and disseminate any information concerning chemical hazards the contractor is bringing into the workplace, and vice versa.

APPENDIX A

The following chemicals are regulated by OSHA as carcinogens in substance-specific standards that include labeling requirements.

- Asbestos
- 4-Nitrobyphenyl
- Alpha-Napthylamine
- Methyl Chloromethyl Ether
- 3,3 Dichlorobenzidine (and its salts)
- Bis-Chloromethyl Ether
- Beta-Naphthylamine
- Benzidine
- 4-Aminodiphenyl
- Ethyleneimine
- Beta-Propiolactone
- 2-Acetylaminofluorene
- 4-Dimethylaminoazobenzene
- N-Nitrosodimethylamine
- Vinyl Chloride (and poly-vinyl Chloride)
- Inorganic Arsenic
- 1,2 Dibromo-3-Chloropropane
- Acrylonitrile
- Ethylene Oxide
- Formaldehyde
- Benzene

ELECTRICAL SAFETY

SECTION 7

Radial Drilling Services, Inc.
(T) +1.281.374.7507
(F) +1.281.374.7509
web: www.radialdrilling.com
e-mail: info@radialdrilling.com

CONTENTS

Section 7 – Electrical Safety

Radial Drilling Services Inc. Tel.: (281) 374-7507, Fax: (281) 374-7509, e-mail: *info@radialdrilling.com*

Electrical Safety

Applicable OSHA Standard: 29 CFR 1910.332-333

1. PURPOSE

a) Radial Drilling Services, Inc. has designed and adopted this electrical safety program to prevent electrically related injuries to personnel resulting from either direct or indirect electrical contacts, or damage to companyproperty and client facilities when work is performed near or on equipment or circuits which are or may be energized.

b) This program also provides for proper training of site supervisors to ensure they have the required knowledge and understanding of electrical work practices and procedures. Employees shall be trained in and familiar with the safety-related work practices that pertain to their respective job assignments.

c) Only employees who are qualified to perform electrical work, knowledgeable about this program, and authorized by the company are allowed to repair or replace electrical components or electrically powered tools or equipment.

d) Electricity has long been recognized as a serious workplace hazard, exposing employees to such dangers as electric shock, electrocution, fires and explosions. References: NFPA 70E, Electrical Safety Requirements for Employee Workplaces, National Electrical Code (NEC) and OSHA Standard (Electrical Safety) 29 CFR 1910 Subpart S - Electrical.

e) Safe work practices regarding electricity shall be followed by employees as they relate to specific job assignments. Specific safety-related work practices shall be consistent with the nature and extent of the associated electrical hazards.

2. RESPONSIBILITIES

a) ***Management***

i) Provide training for qualified and unqualified employees

ii) Conduct inspections to identify electrical safety deficiencies in facilities and at job sites

iii) Guard and correct all electrical deficiencies promptly

iv) Ensure all new electrical installations meet codes and regulations

b) ***Employees***

i) Report electrical deficiencies immediately

ii) **NOT** work on electrical equipment unless authorized and trained

iii) Properly inspect all electrical equipment prior to use

4. DE-ENERGIZED PARTS

a) If an employee is exposed to "live" energized parts or components, these shall be de-energized before the employee begins work on or near them. An exception will be if it can be demonstrated that de-energizing these parts or components will present additional or increased hazards, or if de-energizing is not feasible due to equipment design or operational imitations.

b) Live parts that operate at less than 50 volts to ground need not be de-energized if there will be no increased exposure to electrical burns or to explosion due to electric arcs.

c) Examples of increased or additional hazards include tasks such as deactivation of emergency alarm systems, shutdown of hazardous location ventilation equipment, or removal of illumination for an area.

d) Examples of work that may be performed on or near energized circuit parts because of infeasibility due to equipment design or operational limitations include:

e) Testing of electric circuits that can only be performed with the circuit energized, and

f) Work on circuits that form an integral part of a continuous industrial process in a chemical plant that would otherwise need to be completely shut down in order to permit work on one circuit or piece of equipment.

5. ENERGIZED PARTS

a) If the exposed "live" parts or components are not de-energized for reasons of increased or additional hazards or infeasibility, other safety-related work practices shall be used to protect employees who may be exposed to the electrical hazards involved.

b) Such work practices shall protect employees against direct contact with energized circuit parts with any part of their body, or indirectly through some other conductive object.

c) The work practices that are used shall be suitable for the conditions under which the work is to be performed and for the voltage level of the exposed electric conductors or circuit parts.

6. WORKING ON OR NEAR EXPOSED DE-ENERGIZED PARTS

a) This paragraph applies to work on exposed de-energized parts or near enough to them to expose the employee to any electrical hazard they present.

b) Conductors and parts of electric equipment that have been de-energized but have not been locked out or tagged in accordance with paragraph (b) of this section shall be treated as energized parts, and paragraph (c) of this section applies to work on or near them.

3. TRAINING

a) Unqualified persons

Employees who face a risk of electric shock that is not reduced to a safe level by electrical installation requirements and who are not qualified persons shall also be trained in and be familiar with any electrically related safety practices that are necessary for their safety.

b) Qualified persons

Qualified persons (i.e. those permitted to work on or near exposed energized parts) shall, at a minimum, be trained in and familiar with the following:

i) The skills and techniques necessary to distinguish exposed live parts from other parts of electric equipment.

ii) The skills and techniques necessary to determine the nominal voltage of exposed live parts, and

iii) The clearance distances specified in 1910.333(c) and the corresponding voltages to which the qualified person will be exposed.

iv) An employee must have successfully completed the training required in this program for a qualified person in order to be so considered.

v) Qualified persons whose work on energized equipment involves either direct contact or contact by means of tools or materials shall also have training to make them capable of working safely on energized circuits and shall be familiar with the proper use of special precautionary techniques, personal protective equipment, insulating and shielding materials, and insulated tools.

vi) The required training shall be of the classroom or on-the-job type. The degree of training provided shall be determined by the risk to the employee.

vii) For purposes of general comparison, typical occupational employee categories that face a higher than normal risk of electrical accident include blue collar supervisors; electrical and electronic engineers; electrical and electronic equipment assemblers; electrical and electronic technicians; electricians; industrial machine operators; material handling equipment operators; mechanics and repairers; painters; riggers and roustabouts; stationary engineers; and welders.

viii) Workers in these groups or with comparable job assignments do not need to be trained if their work or the work of those they supervise does not bring them or the employees they supervise close enough to exposed parts of electric circuits operating at 50 volts or more to ground for a hazard to exist.

4. DE-ENERGIZED PARTS

a) If an employee is exposed to "live" energized parts or components, these shall be de-energized before the employee begins work on or near them. An exception will be if it can be demonstrated that de-energizing these parts or components will present additional or increased hazards, or if de-energizing is not feasible due to equipment design or operational imitations.

b) Live parts that operate at less than 50 volts to ground need not be de-energized if there will be no increased exposure to electrical burns or to explosion due to electric arcs.

c) Examples of increased or additional hazards include tasks such as deactivation of emergency alarm systems, shutdown of hazardous location ventilation equipment, or removal of illumination for an area.

d) Examples of work that may be performed on or near energized circuit parts because of infeasibility due to equipment design or operational limitations include:

e) Testing of electric circuits that can only be performed with the circuit energized, and

f) Work on circuits that form an integral part of a continuous industrial process in a chemical plant that would otherwise need to be completely shut down in order to permit work on one circuit or piece of equipment.

5. ENERGIZED PARTS

a) If the exposed "live" parts or components are not de-energized for reasons of increased or additional hazards or infeasibility, other safety-related work practices shall be used to protect employees who may be exposed to the electrical hazards involved.

b) Such work practices shall protect employees against direct contact with energized circuit parts with any part of their body, or indirectly through some other conductive object.

c) The work practices that are used shall be suitable for the conditions under which the work is to be performed and for the voltage level of the exposed electric conductors or circuit parts.

6. WORKING ON OR NEAR EXPOSED DE-ENERGIZED PARTS

a) This paragraph applies to work on exposed de-energized parts or near enough to them to expose the employee to any electrical hazard they present.

b) Conductors and parts of electric equipment that have been de-energized but have not been locked out or tagged in accordance with paragraph (b) of this section shall be treated as energized parts, and paragraph (c) of this section applies to work on or near them.

7. LOCKOUT AND TAGOUT

a) While any employee is exposed to contact with parts of fixed electric equipment or circuits which have been de-energized, the circuits energizing the parts shall be locked out or tagged or both in accordance with the company's written safety procedures for the control of hazardous energy.

b) For the purposes of this safety policy, "fixed equipment" refers to equipment fastened in place or connected by permanent wiring methods.

c) The company shall maintain a copy of the written procedures for control of hazardous energy (lockout and tagout procedures). These shall be made available for inspection by employees and by the Assistant Secretary of Labor and the Assistant Secretary's authorized representatives.

8. DE-ENERGIZING EQUIPMENT

a) Safe procedures for de-energizing circuits and equipment shall be determined before circuits or equipment is de-energized.
These procedures shall be machine-specific, system-specific or circuit specific, in accordance with the company's procedures for control of hazardous energy (lockout and tagout program procedures).

b) The circuits and equipment to be worked on shall be disconnected from all electric energy sources. Control circuit devices, such as push buttons, selector switches, and interlocks, may not be used as the sole means for de-energizing circuits or equipment. Interlocks for electric equipment may not be used as a substitute for lockout and tagging procedures.

c) Stored electric energy which might endanger personnel shall be released.

d) Capacitors shall be discharged and high capacitance elements shall be short-circuited and grounded, if the stored electric energy might endanger personnel. If the capacitors or associated equipment are handled in meeting this requirement, they shall be treated as being energized.

e) Stored non-electrical energy in devices that could re-energize electric circuit parts shall be blocked or relieved to the extent that the circuit parts could not be accidentally energized by the device.

9. APPLICATION OF LOCKS AND TAGS

a) A lock and a tag shall be placed on each disconnecting means used to de-energize circuits and equipment on which work is to be performed. For purposes of the company's program, lockout only and tagout only shall not be permitted as a safe work procedure, except in accordance with the company's written program for the control of hazardous energy for when a lock cannot be applied.

b) Locks shall be attached so as to prevent persons from operating the dis connecting means unless they resort to undue force or the use of tools.

c) Each tag shall contain a statement prohibiting unauthorized operation of the disconnecting means and removal of the tag.

d) Selection and use of locks and tags shall be in accordance with the company's written program for the control of hazardous energy.

e) If a lock cannot be applied, work shall not continue until a specific safe work procedure for the situation at hand is agreed upon between the employee and his or her on-site supervisor with approval prior to continuance of work from the company's Safety Coordinator.

f) When a lock cannot be applied, the on-site supervisor and company Safety Coordinator may allow use of a tagout only when tagout is supplemented by at least one additional safety measure that provides a level of safety equivalent to that obtained by use of a lock. Examples of additional safety measures include the removal of an isolating circuit element, blocking of a controlling switch, or opening of an extra disconnecting device.

10 VERIFICATION OF DE-ENERGIZED CONDITION

a) The requirements of this section shall be met before any circuits or equipment can be considered and worked upon as being de-energized.

b) A qualified person shall operate the equipment operating controls or otherwise verify that the equipment cannot be restarted.

c) A qualified person shall use test equipment to test the circuit elements and electrical parts of equipment to which employees will be exposed and shall verify that the circuit elements and equipment parts are de-energized.

d) The test shall also determine if any energized condition exists as a result of inadvertently induced voltage or unrelated voltage back feed even though specific parts of the circuit have been de-energized and presumed to be safe.

e) If the circuit to be tested is more than 600 volts, nominal, the test equipment shall be checked for proper operation immediately after this test.

11 RE-ENERGIZING EQUIPMENT

a. These requirements shall be met, in the order given, before circuits or equipment are re-energized, even temporarily.

b. A qualified person shall conduct tests and visual inspections, as necessary, to verify that all tools, electrical jumpers, shorts, grounds, and other such devices have been removed, so that the circuits and equipment can be safely energized.

c. Employees exposed to the hazards associated with reenergizing the circuit or equipment shall be warned to stay clear of circuits and equipment.

d. Each lock and tag shall be removed by the employee who applied it or under his or her direct supervision. However, if this employee is absent from the workplace, then the lock or tag may be removed by a qualified person designated to perform this task provided that:

i. The employer ensures that the employee who applied the lock or tag is not available at the workplace, and

ii. The employer ensures that the employee is aware that the lock or tag has been removed before he or she resumes work at that workplace.

e. There shall be a visual determination that all employees are clear of the circuits and equipment.

f. All of the above procedures for reenergizing shall be done in compliance with the company's written program for the control of hazardous energy.

12 WORKING ON OR NEAR EXPOSED ENERGIZED PARTS

a. This section applies to work performed on exposed live parts (involving ei ther direct contact or by means of tools or materials), or work performed near enough so that employees are exposed to these hazards and potential exposures.

b. Regarding work on energized equipment, only qualified persons may work on electric circuit parts or equipment that have not been de-energized under the procedures explained in this program. Such qualified persons shall be capable of working safely on energized circuits and shall be familiar with the proper use of special precautionary techniques, personal protective equipment, insulating and shielding materials, and insulated tools.

c. If work is to be performed near overhead lines, the lines shall be de-energized and grounded, or other protective measures shall be provided before work is started. If the lines are to be de-energized, arrangements shall be made with the person or organization that operates or controls the electric circuits involved to de-energize and ground them. If protective measures, such as guarding, isolating, or insulating, are provided, these precautions shall prevent employees from contacting such lines directly with any part of their body or indirectly through conductive materials, tools, or equipment.

d. The work practices used by qualified persons installing insulating devices on overhead power transmission or distribution lines shall be in accordance with 1910.269 and not by 1910.332 through 1910.335.

e. *Unqualified persons* are specifically prohibited from performing this type of work.

13 UNQUALIFIED PERSONS

a. When an unqualified person is working in an elevated position near over head lines, the location shall be such that the person and the longest conductive object he or she may contact cannot come closer to any unguarded, energized overhead line than the following distances:

i. For voltages to ground 50kV or below - 10 feet (305 cm);

ii. For voltages to ground over 50kV - 10 feet (305 cm) plus 4 inches (10 cm) for every 10kV over 50kV.

b. When an unqualified person is working on the ground in the vicinity of overhead lines, the person may not bring any conductive object closer to unguarded, energized overhead lines than the distances given in this section.

c. For voltages normally encountered with overhead power line, objects which do not have an insulating rating for the voltage involved are considered to be conductive.

15 QUALIFIED PERSONS

a. When a qualified person is working in the vicinity of overhead lines, whether in an elevated position or on the ground, the person may not approach or take any conductive object without an approved insulating handle closer to exposed energized parts than shown in the table Approach Distances For Qualified Employees - Alternating Current contained in this section unless:

i. The person is insulated from the energized part (gloves, with sleeves if necessary, rated for the voltage involved are considered to be insulation of the person from the energized part on which work is performed), or

ii. The energized part is insulated both from all other conductive objects at a different potential and from the person, or

iii. The person is insulated from all conductive objects at a potential different from that of the energized part.

Voltage range (phase to phase)	Minimum approach distance
300V and less	Avoid Contact
Over 300V, not over 750V	1 ft. 0 in. (30.5 cm).
Over 750V, not over 2kV	1 ft. 6 in. (46 cm).
Over 2kV, not over 15kV	2 ft. 0 in. (61 cm).
Over 15kV, not over 37kV	3 ft. 0 in. (91 cm).
Over 37kV, not over 87.5kV	3 ft. 6 in. (107 cm).
Over 87.5kV, not over 121kV	4 ft. 0 in. (122 cm).
Over 121kV, not over 140kV	4 ft. 6 in. (137 cm).

14 VEHICULAR AND MECHANICAL EQUIPMENT

a) Any vehicle or mechanical equipment capable of having parts of its structure elevated near energized overhead lines shall be operated so that a clearance of 10 ft. (305 cm) is maintained. If the voltage is higher than 50kV, the clearance shall be increased 4 in. (10 cm) for every 10kV over that voltage. However, under any of the following conditions, the clearance may be reduced:

i) If the vehicle is in transit with its structure lowered, the clearance may be reduced to 4 ft. (122 cm). If the voltage is higher than 50kV, the clearance shall be increased 4 in. (10 cm) for every 10 kV over that voltage.

ii) If insulating barriers are installed to prevent contact with the lines, and if the barriers are rated for the voltage of the line being guarded and are not a part of or an attachment to the vehicle or its raised structure, the clearance may be reduced to a distance within the designed working dimensions of the insulating barrier.

iii) If the equipment is an aerial lift insulated for the voltage involved, and if the work is performed by a qualified person, the clearance (between the uninsulated portion of the aerial lift and the power line) may be reduced to the distance given in table *Approach Distances for Qualified Employees - Alternating Current.*

b) Employees standing on the ground may not contact the vehicle or mechanical equipment or any of its attachments, unless:

i) The employee is using protective equipment rated for the voltage; or

ii) The equipment is located so that no uninsulated part of its structure (that portion of the structure that provides a conductive path to employees on the ground) can come closer to the line than permitted under this section.

c) If any vehicle or mechanical equipment capable of having parts of its structure elevated near energized overhead lines is intentionally grounded, employees working on the ground near the point of grounding may not stand at the grounding location whenever there is a possibility of overhead line contact. Additional precautions, such as the use of barricades or insulation, shall be taken to protect employees from hazardous ground potentials, depending on earth resistance and fault currents, which can develop within the first few feet or more outward from the grounding point.

15 ILLUMINATION

a) Employees may not enter spaces containing exposed energized parts, unless illumination is provided that enables the employees to perform the work safely.

b) Where lack of illumination or an obstruction precludes observation of the work to be performed, employees may not perform tasks near exposed energized parts.

c) Employees may not reach blindly into areas that may contain energized parts.

16 CONFINED OR ENCLOSED WORK SPACES

When an employee works in a confined or enclosed space (such as a manhole or vault) that contains exposed energized parts, the employer shall provide, and the employee shall use, protective shields, protective barriers, or insulating materials as necessary to avoid inadvertent contact with these parts. Doors, hinged panels, and the like shall be secured to prevent their swinging into an employee and causing the employee to contact exposed energized parts.

17 CONDUCTIVE MATERIALS AND EQUIPMENT

Conductive materials and equipment that are in contact with any part of an employee's body shall be handled in a manner that will prevent them from contacting exposed energized conductors or circuit parts. If an employee must handle long dimensional conductive objects (such as ducts and pipes) in areas with exposed live parts, the employer shall institute work practices (such as the use of insulation, guarding, and material handling techniques) which will minimize the hazard.

18 PORTABLE LADDERS

Portable ladders shall have nonconductive side rails if they are used where the employee or the ladder could contact exposed energized parts. Use of portable ladders shall comply with the company's written safety procedures for working with ladders.

19 CONDUCTIVE APPAREL

Conductive articles of jewelry and clothing (such a watch bands, bracelets, rings, key chains, necklaces, metalized aprons, cloth with conductive thread, or metal headgear) may not be worn if they might contact exposed energized parts. How ever, such articles may be worn if they are rendered nonconductive by covering, wrap ping, or other insulating means.

20 HOUSEKEEPING DUTIES

Where live parts present an electrical contact hazard, employees may not perform housekeeping duties at such close distances to the parts that there is a possibility of contact, unless adequate safeguards (such as insulating equipment or barriers) are provided. Electrically conductive cleaning materials (including conductive solids such as steel wool, metalized cloth, and silicon carbide, as well as conductive liquid solutions) may not be used in proximity to energized parts unless procedures are followed which will prevent electrical contact.

21 INTERLOCKS

Only a qualified person, who is following established safe work procedures in accordance with OSHA requirements, may defeat an electrical safety interlock, and then only temporarily while he or she is working on the equipment. The inter lock system shall be returned to its operable condition when this work is completed.

GROUND FAULT CIRCUIT INTERRRUPTERS (GFCI) & ASSURED GROUNDING PROGRAM

SECTION 8

Radial Drilling Services, Inc.
(T) +1.281.374.7507
(F) +1.281.374.7509
web: www.radialdrilling.com
e-mail: info@radialdrilling.com

CONTENTS

Section 8 – GFCI Program

Radial Drilling Services Inc. Tel.: (281) 374-7507, Fax: (281) 374-7509, e-mail: *info@radialdrilling.com*

GFCI Program

Applicable OSHA Standards: 29 CFR 1926.404

1 PURPOSE& SCOPE

a) To establish methods, guidelines and responsibilities to protect Radial Drilling Services, Inc. employees from electrical exposure while on work site

b) This program applies to all employees and subcontractors working within Company controlled job sites. This assured equipment grounding conductor program covers all cord sets, receptacles which are not a part of the building or structure, and equipment connected by cord and plug which are available for use or used by employees on well sites and other work locations.

2 INTRODUCTION

All 120-volt, single-phase 15- and 20-ampere receptacle outlets on work sites, which are not a part of the permanent wiring of the building or structure and which are in use by employees, shall have approved ground-fault circuit interrupters for personnel protection. Receptacles on a two-wire, single-phase portable or vehicle-mounted generator rated not more than 5kV, where the circuit conductors of the generator are insulated from the generator frame and all other grounded surfaces, need not be protected with ground-fault circuit interrupters.

3 GENERAL REQUIREMENTS

a) Employees who are exposed to electrical hazards at a work location shall use either ground fault circuit interrupters or assured equipment grounding conductor program to protect them from these hazards. These requirements are in addition to any other specific requirements for equipment grounding conductors.

b) The Company has established and implemented an assured grounding conductor program at all work locations covering all cord sets, receptacles that are not part of the building or structure and equipment connected by cord and plug that are available for use, or are in use by employees.

c) A written description of the program including the specific procedures adopted by the Company shall be available at each work location for inspection and copying by the Assistant Secretary and any affected employee.

d) The Company shall designate one or more competent persons to implement the program at each work location. "Competent person" means one who is capable of identifying existing and predictable hazards in the surroundings or working conditions which are unsanitary, hazardous, or dangerous to employees, and who has authorization to take prompt corrective measures to eliminate them. At most work locations the competent person will be the Site Supervisor.

e) Each cord set, attachment cap, plug and receptacle of cord sets, and any equipment connected by cord and plug, except cord sets and receptacles which are fixed and not exposed to damage, shall be visually inspected before each day's use for external defects, such as deformed or missing pins or insulation damage, and for indications of possible internal damage. Equipment found damaged or defective shall not be used until repaired.

f) Damaged items shall be tagged "DO NOT USE", removed from service until repaired and tested.

g) The following tests shall be performed on all cord sets, receptacles which are not a part of the permanent wiring of the building or structure, and cord- and plug-connected equipment required to be grounded:

   i) All equipment grounding conductors shall be tested for continuity and shall be electrically continuous.

   ii) Each receptacle and attachment cap or plug shall be tested for correct attachment of the equipment grounding conductor. The equipment grounding conductor shall be connected to its proper terminal.

h) The Company shall not make available or permit the use by employees of any equipment which has not met the requirements of this program.

   j) Tests performed as required in this program shall be recorded. This test record shall identify each receptacle, cord set, and cord- and plug-connected equipment that passed the test and shall indicate the last date it was tested or the interval for which it was tested. This record shall be kept by means of logs, color coding, or other effective means and shall be maintained until replaced by a more current record. The record shall be made available on the work location for inspection by the Assistant Secretary and any affected employee. A copy of this program is kept on each work location with the Site Supervisor.

k) The Site Supervisor is responsible for implementing and monitoring the GFCI and assured grounding program.

l) The GFCI is not a replacement for visually checking all cords, wires, and other electrical devices for defects on a daily basis.

m) All 120 volt, single phase, 15 and 20 ampere receptacles shall be of the grounding type and their contacts shall be grounded by connection to the equipment grounding conductor of the circuit supplying the receptacles in accordance with applicable requirements of the National Electrical Code.

n) All 120 volt cord sets (extension cords) shall have an equipment grounding conductor which shall be connected to the grounding contacts of the connectors on each end of the cord. Extension cord sets used with por table electric tools and appliances shall be of the three-wire type and shall be designed for heavy or extra heavy-duty usage. Flexible cords used with temporary and portable lights shall be designed for heavy or extra heavy-duty usage.

o) The exposed noncurrent-carrying metal parts of 120 volt cord and plug connected tools or equipment that are likely to become energized shall be grounded in accordance with the applicable requirements of the National Electrical Code.

p) Employees shall visually inspect receptacles, flexible cord sets (extension cords), electrical equipment and electrical tools before each day's use for external defects such as:

i) Deformed or missing pins;

ii) Insulation damage;

iii) Indication of possible internal damage.

Where there is evidence of damage the item shall be taken out of service until tests or any required repairs have been made.

4 TESTING

a) All 120-volt, single-phase 15- and 20-ampere receptacle outlets on work sites, which are not a part of the permanent wiring of the building or structure, 120 volt flexible cord sets and 120 volt cord and plug connected equipment which are in use by employees, shall be tested.

b) A qualified person will be designated by the Site Supervisor to be responsible for testing, tagging and documentation of testing of all equipment-grounding conductors.

c) All equipment-grounding conductors will be tested for continuity and they shall be electrically continuous. A continuity inspection device will be used or a voltmeter that is specifically designed to test for continuity.

d) Each receptacle and attachment cap or plug shall be tested for correct attachment of the equipment-grounding conductor. The equipment-grounding conductor shall be connected to the proper terminal.

e) All required test shall be performed:

i) Before its first use;

ii) Before the equipment is returned to service following any repairs;

iii) Before the equipment is used after any incident that can be reasonably suspected to have caused damage (for example, when a cord is run over).

iv) At intervals not exceeding three months, except that cord sets and receptacles, which are fixed and not exposed to damage, shall be tested at intervals not exceeding six months.

f) Test verification shall be by means of a color coded marking tape on the receptacle, cord set or equipment to identify that it has passed the test and to indicate the quarter as illustrated in the following table:

Quarter	Month	Color Code	Number
1st	January	White	1
1st	February	White	2
1st	March	White	3
2nd	April	Green	1
2nd	May	Green	2
2nd	July	Green	3
3rd	August	Red	1
3rd	September	Red	2
3rd	October	Red	3
4th	November	Orange	1
4th	December	Orange	2
4th	Repair Color	Orange	3
	September	Brown	

5 TRAINING & TESTING

a) Training about the program shall be provided to all affected employees prior to work assignments involving exposure to electrical hazards. Training will primarily involve a thorough review of what the standard covers (29 CFR 1926.404), Company policy and work experiences relating to implementation of this program.

b) Personnel so trained shall be tested as a way to help confirm and document their understanding of information presented. A score of between 80% and 100% will require a review of missed questions, if any, and the score corrected to 100%. A score of below 80% will require complete retraining and testing.

c) The test format is included as Appendix 1 in this program.

Appendix 1
Radial Drilling Services, Inc.
Ground Fault Circuit Interrupters (GFCI) and Assured Grounding Program

TEST

Employee Name (Print): _____

Employee Signature: _____ Score: _____

Instructor: _____ Date: _____

Circle the answer that is most correct:

T F 1. This policy applies to all employees and subcontractors working within Radial Drilling Services, Inc. controlled job sites.

T F 2. Employees may use any equipment that has not met the requirements of this program.

T F 3. The GFCI is not a replacement for visually checking all cords, wires, and other electrical devices for defects.

T F 4. All 120 volt cord sets (extension cords) shall have an equipment grounding conductor which shall be connected to the grounding contacts of the connectors on each end of the cord.

T F 5. All 120-volt, single-phase 15- and 20-ampere receptacle outlets on work sites, which are not a part of the permanent wiring of the building or structure, 120 volt flexible cord sets and 120 volt cord and plug connected equipment which are in use by employees, shall be tested.

T F 6. A qualified person, designated by the Site Supervisor, is responsible for testing, tagging and documentation of testing of all equipment-grounding conductors.

T F 7. Test verification shall be by means of a color-coded marking tape on the receptacle, cord set or equipment to identify that it has passed the test and to indicate the quarter it was tested.

T F 8. All test shall be performed whenever there is time for it.

T F 9. Each receptacle and attachment cap or plug shall be tested for correct at tachment of the equipment-grounding conductor.

T F 10. The equipment-grounding conductor shall be connected to the proper terminal.

Radial Drilling Services, Inc.
Ground Fault Circuit Interrupters (GFCI) and Assured Grounding Program

TEST ANSWER KEY

1. T
2. F
3. T
4. T
5. T
6. T
7. T
8. F
9. T
10. T

CONTROL OF HAZARDOUS ENERGY LOCKOUT & TAGOUT

SECTION 9

Radial Drilling Services, Inc.
(T) +1.281.374.7507
(F) +1.281.374.7509
web: www.radialdrilling.com
e-mail: info@radialdrilling.com

CONTENTS

Section 9 – Control of Hazardous Energy/LOTO

Radial Drilling Services Inc. Tel.: (281) 374-7507, Fax: (281) 374-7509, e-mail: *info@radialdrilling.com*

Applicable OSHA Standards: 29 CFR 1910.147

1 PURPOSE & SCOPE

a) This policy and program for Radial Drilling Services, Inc. covers the servicing and maintenance of powered machines, tools and equipment used in the workplace where the unexpected energization or release of product, start up of the machines, equipment or system, or release of stored energy, could cause injury to employees. This policy establishes minimum performance requirements for the control of such hazardous energy.

b) This policy and program apply to the control of energy during installation, servicing, repair and/or maintenance operations. Normal production operations are not covered by this policy.

c) Servicing and/or maintenance which takes place during normal production operations is covered by this standard only if:

i) An employee is required to remove or bypass a guard or other safety device; or

ii) An employee is required to place any part of his or her body into an area on a machine or piece of equipment where work is actually per formed upon the material being processed (point of operation) or where an associated danger zone exists during a machine operating cycle.

iii) Minor tool changes and adjustments, and other minor servicing activities, which take place during normal production operations, are not covered by this standard if they are routine, repetitive, and integral to the use of the equipment for production, provided that the work is performed using alternative measures which provide effective protection.

d) This policy and program does not apply to work on cord and plug connected electric equipment for which exposure to the hazards of unexpected energization or start up of the equipment is controlled by the unplugging of the equipment from the energy source and by the plug being under the exclusive control of the employee performing the servicing or maintenance.

e) This policy and program does not apply to hot tap operations involving transmission and distribution systems for substances such as gas, steam, water or petroleum products when they are performed on pressurized pipelines, provided that the employer demonstrates that:

i) continuity of service is essential;

ii) shutdown of the system is impractical; and

iii) documented safe work procedures are followed, and special equipment is used which will provide proven effective protection for employees.

f) Under this policy and program, the company shall establish and utilize procedures for affixing appropriate lockout devices or tagout devices to energy isolating devices, and to otherwise disable machines or equipment to prevent unexpected energization, start up or release of stored energy in order to prevent injury to employees.

g) When other operations and specific safe work procedures require the use of lockout or tagout, they shall be used and supplemented by the procedural and training requirements of this policy and the procedures set forth herein.

h) Written company Lockout and Tagout (LOTO) Procedures shall be referenced when following machine-specific, circuit specific and system-specific methods for isolating and controlling hazardous energy.

2 DEFINITIONS

a) Affected employee. An employee whose job requires him/her to operate or use a machine or equipment on which servicing or maintenance is being performed under lockout or tagout, or whose job requires him/her to work in an area in which such servicing or maintenance is being performed.

b) Authorized employee. A person who locks out or tags out machines or equipment in order to perform servicing or maintenance on that machine or equipment. An affected employee becomes an authorized employee when that employee's duties include performing servicing or maintenance covered under this program.
Company requirements for an authorized employee include training in the company's system and specific procedures for performing and removing a lockout and tagout; participation in a group lockout and tagout; and additional training as may be required to be equivalent to the host employer's LOTO and work permit procedures (when applicable).

c) Capable of being locked out. An energy isolating device is capable of being locked out if it has a hasp or other means of attachment to which, or through which, a lock can be affixed, or it has a locking mechanism built into it. Other energy isolating devices are capable of being locked out, if lockout can be achieved without the need to dismantle, rebuild, or replace the energy isolating device or permanently alter its energy control capability.

d) *Energized.* Connected to an energy source or containing residual or stored energy.

e) *Energy isolating device.* A mechanical device that physically prevents the transmission or release of energy, including but not limited to the following:

i) A manually operated electrical circuit breaker; a disconnect switch;

ii) A manually operated switch by which the conductors of a circuit can be disconnected from all ungrounded supply conductors, and, in addition, no pole can be operated independently;

iii) A line valve;

iv) A block;

v) And any similar device used to block or isolate energy. ***IMPORTANT NOTE: Push buttons, selector switches and other control circuit type devices are not energy isolating devices.***

f) *Energy source.* Any source of electrical (direct or stored), mechanical, hydraulic, pneumatic, chemical, thermal, kinetic, springs or devices under tension, gravity or other energy.

g) *Hot tap.* A procedure used in the repair, maintenance and services activities which involves welding on a piece of equipment (pipelines, vessels or tanks) under pressure, in order to install connections or appurtenances. Hot tapping is commonly used to replace or add sections of pipeline without the interruption of service for air, gas, water, steam, and petrochemical distribution systems.

h) *Lockout.* The placement of a lockout device on an energy isolating device, in accordance with an established procedure, ensuring that the energy isolating device and the equipment being controlled cannot be operated until the lockout device is removed.

i) *Lockout device.* A device that utilizes a positive means such as a lock, either key or combination type, to hold an energy isolating device in the safe position and prevent the energizing of a machine or equipment. Included are blank flanges and bolted slip blinds.

j) *Normal production operations.* The utilization of a machine or equipment to perform its intended production function.

k) *Servicing and/or maintenance.* Workplace activities such as constructing, installing, setting up, adjusting, inspecting, modifying, and maintaining and or servicing machines or equipment. These activities include lubrication, cleaning or unjamming of machines or equipment and making adjustments or tool changes, where the employee may be exposed to the unexpected energization or startup of the equipment or release of hazardous energy.

l) *Setting up.* Any work performed to prepare a machine or equipment to perform its normal production operation.

m) *Tagout.* The placement of a tagout device on an energy isolating device, in accordance with an established procedure, to indicate that the energy isolating device and the equipment being controlled may not be operated until the tagout device is removed.

n) *Tagout device.* A prominent warning device, such as a tag and a means of attachment, which can be securely fastened to an energy isolating device in accordance with an established procedure, to indicate that the energy isolating device and the equipment being controlled may not be operated until the tagout device is removed.

3 GENERAL REQUIREMENTS

a) Energy Control Program

The energy control program established here consists of energy control procedures, employee training and periodic inspections to ensure that before any employee performs any servicing or maintenance on a machine or equipment where the unexpected energizing, startup or release of stored energy could occur and cause injury, the machine or equipment shall be isolated from the energy source and rendered inoperative.

b) Lockout/tagout

i) Lockout and tagout shall only be performed by authorized persons as defined in this policy and program. Persons who are exposed to accidents and injury in their work by the accidental energizing of the machine, circuit or system on which they are working shall be trained and authorized to perform lockout and tagout. This includes supervisors, welders, and each individual who is exposed to the hazard.

ii) If an energy isolating device is not capable of being locked out, the employee authorized to perform lockout and tagout shall utilize a tagout system, but only with specific permission of the on-site supervisor and the company Safety Coordinator. In all other circumstances lockout and tagout shall be utilized to control and isolate hazardous energy sources.

iii) Whenever replacement or major repair, renovation or modification of a machine or equipment is performed, and whenever new machines or equipment are installed, company management shall confirm that energy isolating devices for such machines or equipment are designed to accept a lockout device.

c) Special permissions and full employee protection required for "tagout only"

i) Specific permissions of the on-site supervisor and the company Safety Coordinator are required when a lock cannot be placed and "tagout only" is considered. When such permissions have been obtained and a tagout device is used on an energy isolating device that is capable of being locked out, the tagout device shall be attached at the same location that the lockout device would have been attached. The standard that shall be met in all authorized "tagout only" situations is that the company shall demonstrate that the tagout program alone will provide a level of safety equivalent to that obtained by using a lockout program.

ii) In demonstrating that a level of safety is achieved in the tagout program which is equivalent to the level of safety obtained by using a lockout program, the safety standard that shall be met is full compliance with all tagout-related provisions together with such additional elements as are necessary to provide the equivalent safety available from the use of a lockout device. Additional means to be considered as part of the demonstration of full employee protection shall include the implementation of additional safety measures such as:

(1) the removal of an isolating circuit element,

(2) blocking of a controlling switch,

(3) opening of an extra disconnecting device,

(4) or the removal of a valve handle to reduce the likelihood of inadvertent energization.

d) Energy control procedure

i) Procedures shall be developed, documented and utilized for the control of potentially hazardous energy when employees are engaged in the activities covered by this policy and program based on job-specific and site-specific work situations.

ii) The company need not document the required procedure for a particular machine or equipment, when all of the following elements exist:

(1) The machine or equipment has no potential for stored or residual energy or re-accumulation of stored energy after shut down which could endanger employees;

(2) the machine or equipment has a single energy source which can be readily identified and isolated;

(3) the isolation and locking out of that energy source will completely de-energize and deactivate the machine or equipment;

(4) the machine or equipment is isolated from that energy source and locked out during servicing or maintenance;

(5) a single lockout device will achieve a locked-out condition;

(6) the lockout device is under the exclusive control of the authorized employee performing the servicing or maintenance;

(7) the servicing or maintenance does not create hazards for other employees; and

(8) in utilizing this exception, the company has had no accidents involving the unexpected activation or re-energization of the machine or equipment during servicing or maintenance.

e) The machine-specific or system-specific procedures shall clearly and specifically outline the scope, purpose, authorization, rules, and techniques to be utilized for the control of hazardous energy, and the means to enforce compliance including, but not limited to, the following:

i) A specific statement of the intended use of the procedure;

ii) Specific procedural steps for shutting down, isolating, blocking and securing machines or equipment to control hazardous energy;

iii) Specific procedural steps for the placement, removal and transfer of lockout devices or tagout devices and the responsibility for them; and

iv) Specific requirements for testing a machine or equipment to determine and verify the effectiveness of lock out devices, tagout devices, and other energy control measures.

f) Protective materials and hardware

i) Locks, tags, chains, wedges, key blocks, adapter pins, self-locking fasteners, or other hardware shall be provided by the company for isolating, securing or blocking of machines or equipment from energy sources.

ii) Lockout devices and tagout devices shall be singularly identified; shall be the only devices(s) used for controlling energy; shall not be used for other purposes; and shall meet the following requirements:

(1) Durability

(a) Lockout and tagout devices shall be capable of withstanding the environment to which they are exposed for the maximum period of time that exposure is expected.

(b) Tagout devices shall be constructed and printed so that exposure to weather conditions or wet and damp locations will not cause the tag to deteriorate or the message on the tag to become illegible.

(c) Tags shall not deteriorate when used in corrosive environments such as areas where acid and alkali chemicals are handled and stored.

(2) Standardized devices

(a) Lockout and tagout devices shall be standardized within the facility or workplace in at least one of the following criteria: Color; shape; or size; and additionally, in the case of tagout devices, print and format shall be standardized.

(3) Substantial design and construction

(a) Lockout devices shall be substantial enough to prevent removal with out the use of excessive force or unusual techniques, such as with the use of bolt cutters or other metal cutting tools.

(b) Tagout devices, including their means of attachment, shall be substantial enough to prevent inadvertent or accidental removal. Tagout device attachment means shall be of a non-reusable type, attachable by hand, self-locking, and non-releasable with a minimum unlocking strength of no less than 50 pounds and having the general design and basic characteristics of being at least equivalent to a 1-piece, all environment-tolerant nylon cable tie.

(4) Identifiable.

(a) Lockout devices and tagout devices shall indicate the identity of the employee applying the device(s).

iii) Tagout devices shall warn against hazardous conditions if the machine or equipment is energized and shall include a legend such as the following: ***Do Not Start. Do Not Open. Do Not Close. Do Not Energize. Do Not Operate.***

g) Periodic inspection

i) The Safety Coordinator shall conduct a periodic inspection of the energy control procedure at least annually to ensure that the procedure and OSHA requirements are being followed.

ii) The periodic inspection shall be performed by an authorized employee other than the ones(s) utilizing the energy control procedure being inspected.

iii) The periodic inspection shall be conducted to correct any deviations or inadequacies identified.

iv) Where lockout is used for energy control, the periodic inspection shall include a review, between the inspector and each authorized employee, of that employee's responsibilities under the energy control procedure being inspected.

v) Where tagout is used for energy control, the periodic inspection shall include a review, between the inspector and each authorized and affected employee, of that employee's responsibilities under the energy control procedure being inspected, and the elements set forth in paragraph (c)(7)(ii) of this section.

vi) The company shall certify in writing that the periodic inspections have been performed. The certification shall identify the machine or equipment on which the energy control procedure was being utilized, the date of the inspection, the employees included in the inspection, and the person performing the inspection.

h) Training and communication

i) The company shall provide training to ensure that the purpose and function of the energy control program are understood by employees and that the knowledge and skills required for the safe application, usage, and removal of the energy controls are acquired by employees. The training shall include the following:

(1) Each authorized employee shall receive training in the recognition of applicable hazardous energy sources, the type and magnitude of the energy available in the workplace, and the methods and means necessary for energy isolation and control.

(2) Each affected employee shall be instructed in the purpose and use of the energy control procedure.

(3) All other employees whose work operations are or may be in an area where energy control procedures may be utilized, shall be instructed about the procedure, and about the prohibition relating to attempts to restart or re-energize machines or equipment which are locked out or tagged out.

ii) When tagout systems are used, employees shall also be trained in the following limitations of tags:

(1) Tags are essentially warning devices affixed to energy isolating devices, and do not provide the physical restraint on those devices that is provided by a lock.

(2) When a tag is attached to an energy isolating means, it is not to be removed without authorization of the authorized person responsible for it, and it is never to be bypassed, ignored, or otherwise defeated.

(3) Tags must be legible and understandable by all authorized employees, affected employees, and all other employees whose work operations are or may be in the area, in order to be effective.

(4) Tags and their means of attachment must be made of materials which will withstand the environmental conditions encountered in the workplace.

(5) Tags may evoke a false sense of security, and their meaning needs to be understood as part of the overall energy control program.

(6) Tags must be securely attached to energy isolating devices so that they cannot be inadvertently or accidentally detached during use.

iii) Employee retraining

(1) Retraining shall be provided for all authorized and affected employees whenever there is a change in their job assignments, a change in machines, equipment or processes that present a new hazard, or when there is a change in the energy control procedures.

(2) Additional retraining shall also be conducted whenever a periodic inspection reveals, or whenever the company has reason to believe that there are deviations from or inadequacies in the employee's knowledge or use of the energy control procedures.

(3) The retraining shall re-establish employee proficiency and introduce new or revised control methods and procedures, as necessary.

iv) The company shall certify that employee training has been accomplished and is being kept up to date. The certification shall contain each employee's name and dates of training.

i) Energy isolation, lockout and/or tagout shall be performed only by the authorized employees who are performing the servicing or maintenance.

j) Affected employees shall be notified by the company on-site or department supervisor or authorized employee of the application and removal of lockout devices or tagout devices. Notification shall be given before the controls are applied, and after they are removed from the machine or equipment.

4 APPLICATION OF CONTROL

a) The established procedures for the application of energy control (the lock out or tagout procedures) shall cover the following elements and actions and shall be done in the following sequence:

i) *Preparation for shutdown.* Before an authorized or affected employee turns off a machine or equipment, the authorized employee shall have knowledge of the type and magnitude of the energy, the hazards of the energy to be controlled, and the method or means to control the energy.

ii) *Machine or equipment shutdown.* The machine or equipment shall be turned off or shut down using the procedures established for the machine or equipment. An orderly shutdown must be utilized to avoid any additional or increased hazard(s) to employees as a result of the equipment stoppage.

iii) *Machine or equipment isolation.* All energy isolating devices that are needed to control the energy to the machine or equipment shall be physically located and operated in such a manner as to isolate the machine or equipment from the energy source(s).

iv) Lockout or tagout device application.

(1) Lockout or tagout devices shall be affixed on each energy isolating device by authorized employees.

(2) Lockout devices, where used, shall be affixed in a manner to that will hold the energy isolating devices in a “safe” or “off” position.

(3) Tagout devices, where used, shall be affixed in such a manner as will clearly indicate that the operation or movement of energy isolating devices from the “safe” or “off” position is prohibited.

(a) Where tagout devices are used with energy isolating devices designed with the capability of being locked, the tag attachment shall be fastened at the same point at which the lock would have been attached.

(b) Where a tag cannot be affixed directly to the energy isolating device, the tag shall be located as close as safely possible to the device, in a position that will be immediately obvious to anyone attempting to operate the device.

(4) Stored energy

(a) Following the application of lockout or tagout devices to energy isolating devices, all potentially hazardous stored or residual energy shall be relieved, disconnected, restrained, and otherwise rendered safe.

(b) If there is a possibility of re-accumulation of stored energy to a hazardous level, verification of isolation shall be continued until the servicing or maintenance is completed, or until the possibility of such accumulation no longer exists.

(5) Verification of isolation. Prior to starting work on machines or equipment that have been locked out or tagged out, the authorized employee shall verify that isolation and deenergization of the machine or equipment have been accomplished.

v) *Release from lockout or tagout.* Before lockout or tagout devices are removed and energy is restored to the machine or equipment, procedures shall be followed and actions taken by the authorized employee(s) to ensure the following:

(1) The machine or equipment. The work area shall be inspected to ensure that nonessential items have been removed and to ensure that machine or equipment components are operationally intact.

(2) Employees.

(a) The work area shall be checked to ensure that all employees have been safely positioned or removed.

(b) After lockout or tagout devices have been removed and before a machine or equipment is started, affected employees shall be notified that the lockout or tagout device(s) have been removed.

(3) Lockout or tagout devices removal.

(a) Each lockout or tagout device shall be removed from the energy isolating device by the employee who applied the device.

(b) When the authorized employee who applied the lockout or tagout device is not available to remove it, that device may be removed under the direction of the On-site Supervisor or Department Supervisor in accordance with the company's specific written procedures, and when the supervisor has been trained for such removal in accordance with the company's written lockout and tagout procedures. The safety standard to be met is that the specific procedure provides equivalent safety to the removal of the device by the authorized employee who applied it. The specific procedure shall include at least the following elements:

(i) Verification by the company that the authorized employee who applied the device is not at the facility;

(ii) Making all reasonable efforts to contact the authorized employee to inform him/her that his/her lockout or tagout device has been removed; and

(iii) Ensuring that the authorized employee has this knowledge before he/she resumes work at that facility.

b) *Additional requirements.*

i) Testing or positioning of machines, equipment or components thereof. In situations in which lockout or tagout devices must be temporarily removed from the energy isolating device and the machine or equipment energized to test or position the machine, equipment or component thereof, the following sequence of actions shall be followed:

(1) Clear the machine or equipment of tools and materials in accordance with procedures specified in this policy and program;

(2) Remove employees from the machine or equipment area in accordance with procedures specified in this policy and program;

(3) Remove the lockout or tagout devices in accordance with procedures specified in this policy and program;

(4) Energize and proceed with testing or positioning;

(5) De-energize all systems and reapply energy control measures in accordance with procedures specified in this policy and program to continue the servicing and/or maintenance.

ii) Outside personnel (contractors, etc.)

(1) Whenever outside servicing personnel are to be engaged in activities covered by the scope and application of this standard, the company and the outside contractor shall inform each other of their respective lockout or tagout procedures.

(2) The company on-site supervisor shall ensure that his/her employees understand and comply with the restrictions and prohibitions of the outside contractor's energy control program.

iii) Group lockout or tagout

(1) When servicing and/or maintenance is performed by a crew, craft, department or other group, they shall utilize a procedure which affords the employees a level of protection equivalent to that provided by the implementation of a personal lockout or tagout device.

(2) Group lockout or tagout devices shall be used in accordance with the procedures required by machine, circuit or system specific lockout and tagout procedures, but not necessarily limited to, the following specific requirements:

(a) Primary responsibility is vested in an authorized employee for a set number of employees working under the protection of a group lock out or tagout device (such as an operations lock);

(b) Provision for the authorized employee to ascertain the exposure status of individual group members with regard to the lockout or tagout of the machine or equipment and

(c) When more than 1 crew, craft, department, etc. is involved, assignment of overall job-associated lockout or tagout control responsibility to an authorized employee designated to coordinate affected work forces and ensure continuity of protection; and

(d) Each authorized employee shall affix a personal lockout or tagout device to the group lockout device, group lockbox, or comparable mechanism when he or she begins work, and shall remove those devices when he or she stops working on the machine or equipment being serviced or maintained.

iv) *Shift or personnel changes.* Specific procedures shall be utilized during shift or personnel changes to ensure the continuity of lockout or tagout protection, including provision for the orderly transfer of lockout or tagout device protection between off-going and oncoming employees, to minimize exposure to hazards from the unexpected energization or start-up of the machine or equipment, or the release of stored energy.

5 SPECIFIC PROCEDURES

a) Individual LOTO. Compare company LOTO procedures with host employer LOTO procedures in place or being utilized at the job site. Proper LOTO procedures require the following steps:

i) Complete the company's or host employer's work permit or Job Safety Analysis (JSA), as applicable to the work and situation and in accordance with company procedures.

ii) Notify all affected personnel and host employer personnel in the immediate or affected area that LOTO will be utilized and why.

iii) Identify all energy sources and isolation devices.

iv) As allowed and authorized by the host employer, shut down the equipment by following normal shutdown procedures in accordance with host employer requirements. The host employer may require shutdown by host employer personnel only.

v) Isolate the equipment from all potential energy sources.

vi) Lockout and tagout energy isolation devices in accordance with company safety procedures, or confirm any such LOTO by host employer personnel. Complete the required LOTO information on the work permit form or JSA in accordance with form completion procedures.

vii) Stored energy (such as that in springs, elevated machine members, rotating flywheels, hydraulic systems, air, gas, capacitors, steam, or water pressure) must be dissipated or restrained by appropriate methods (such as repositioning, blocking, bleeding down).

viii) Visually inspect equipment isolation and de-energization by attempting to start or otherwise operate the device. This is done to ensure that the LOTO was effective.

ix) Perform the repair or maintenance.

x) Inspect the area around the machines or equipment to ensure that no one is exposed; then remove any tools or rags, and replace any guards or covers.

xi) Notify all affected personnel in the area that energy will be restored.

xii) Remove all LOTO devices.

xiii) Operate the energy-isolating devices to restore energy to the machine or equipment.

xiv) Return the equipment to normal service.

xv) Advise all affected personnel that operations are back to normal.

xvi) Complete and terminate the work permit or JSA form.

b) Extended-Time Energy Isolation Work. When equipment or machines have been locked out for longer that 24 hours, the individual performing the work shall confirm the following:

i) Appropriate locks and tags remain in place

ii) The tag is still serviceable, effective in its communication, and appropriate to the situation

c) Shift Changes and Call-Out Situations. During changes of shifts and when there is a call-out, any LOTO in place must carry over and be maintained as effective protection. The procedures explained below shall be followed regarding shift changes and call-outs:

i) Employees coming to work on a shift or called out to a work assignment shall identify any equipment, machines or systems pertinent to the work that are locked out.

ii) Employees shall inspect and become thoroughly familiar with the LOTO procedures in place and how they are protecting personnel at the time of the shift change or call-out.

iii) When the authorized person who installed the LOTO will not be the same person who completes and removes the LOTO, the personnel coming onto the shift or responding to the call-out shall place their own lock(s) and tag(s) either before or during the process of removal of the lock(s) and tag(s) of the authorized person being relieved.

d) Procedure Involving More Than One Person

i) When more than one person is performing work on equipment, machines or systems that require LOTO, each individual performing this work must place his or her own lock(s) or tag(s) in a manner that effectively isolates energy sources.

ii) If an energy-isolating device accepts only a single lock or tag, a LOTO hasp device that accepts multiple locks and tags shall be used to secure the single-lock energy isolating device.

iii) If locked box or locked cabinet procedures is chosen for performing LOTO, confirm that a single lock is placed on the energy-isolating device and the key to that single lock is secured in the locked box or locked cabinet. In turn, the locked box or cabinet is then secured by a lock placed by each employee performing the work. In this way each member of the group is protected by his or her own lock and key because it secures the key to the lock on the energy-isolating device.

iv) As each member of the group completes his or her work and no longer need LOTO protection, that individual shall remove his or her lock from the box or cabinet containing the key to the lock on the energy-isolating device.

e) Testing or Positioning.

i) A supervisor in charge of work must authorize any removal of a LOTO device prior to any testing or positioning of machines, equipment or components, this must be approved by supervision.

ii) The authorized person who placed the LOTO must clear the machine or equipment and make sure that potentially exposed personnel are at a safe location before any LOTO device is removed.

iii) LOTO device(s) shall be removed only for the time necessary to conduct the test or positioning.

iv) As soon as testing or positioning are completed, the equipment, machine or system shall be de-energized in accordance with LOTO procedures and LOTO shall be re-applied. At that point attempt shall be made to start the equipment, machine or system as a test to confirm that the replaced LOTO is effective.

f) When Work and Required LOTO Carry Over to Another Shift. Sometimes specific work or maintenance will carry over to the next shift. In this situation the locked box procedure for LOTO may be used to protect personnel. This procedure in volves:

i) The authorized person(s) place one lock and tag on an energy isolation device. Note that more than one energy-isolating device may be involved.

ii) All keys to locks placed on energy-isolating devices are then secured inside of a locked box.

iii) The locked box is secured with a hasp that accepts multiple locks.

iv) Once an authorized person involved in the work confirms that all potentially hazardous energy sources are effectively isolated, locked out and tagged out, the authorized person places his or her own lock and tag on the locked box. This is an acceptable alternative to having each authorized person place a lock and tag on each locked-out energy-isolating device.

g) Removal of Another Authorized Person's LOTO. In the event that an authorized person leaves the work location without removing a LOTO he or she has placed there, the company has established specific safety procedures that shall be fol lowed prior to and when removing the lock or tag. Note that the host employer may have its own procedures regarding removal of another person's LOTO. These should be reviewed and coordinated with company procedures. Company procedures are explained below:

i) Make a determined effort to notify the authorized person who placed the LOTO so that they can return to the work location and personally remove the lock and tag.

ii) In the event that the authorized person who placed the LOTO cannot be contacted or is not able to come to the work location, the company Site Supervisor or other authorized personnel shall confirm that it is safe to remove the lock and that the lock is removed, and all energy-isolating devices are returned to normal operating position.

iii) The Site Supervisor shall notify the authorized person who initially placed the LOTO about the removal immediately upon that individual's returning to work.

h) Group LOTO — Responsibilities and Requirements.

The following safe work procedures for performing a *Group Lockout and Tagout* have been established by the company. These procedures shall be followed in coordination with group LOTO procedures of the host employer.
Procedures are designed to make sure all employees and personnel involved are identified, and that the level of LOTO protection provided to the group is equivalent to that provided by an individually placed LOTO.

When a LOTO involves more than one energy-isolating device, or when multiple personnel are involved, it may be appropriate to use separate group lockouts and tagouts. For example, it may not be practical to require each authorized person to LOTO at multiple energy-isolating devices if not practical. At the same time, each employee shall comply with LOTO procedures and achieve effective protection from potentially hazardous energy sources.

The group LOTO procedure provides an option for compliance with safe work requirements while not requiring an authorized person to place more than a single LOTO. The company's Site Supervisor and the host employer's field supervisor shall make the decision when to perform a group LOTO rather than LOTOs placed by individual authorized persons.

Group LOTO requires that a single authorized person be designated as the individual with overall and primary responsibility for coordinating the group LOTO. This designated authorized person shall be in charge of the LOTO and be responsible for ensuring that LOTO sequences are effectively completed. This includes performing the basic procedures and confirming that all procedures for group LOTO are followed.

Procedures for group LOTO are:

i) Complete the appropriate company and/or host employer work permit.

ii) Designate the authorized person who will be in charge of and responsible for the group LOTO.

iii) Complete a thorough assessment of the machines, equipment, systems and processes involved to determine all potential sources of hazardous energy. This includes identification and understanding all potential sources of residual or stored energy. This step may include discussions with other work groups, workers who have previously performed similar work, and host employer representatives who are familiar with this type of work operation and the effective control of hazardous energy.

iv) Confirm that the host employer has been notified in accordance with established procedures.

v) Shutdown, or confirm shutdown, of equipment, machines, systems or processes involved with the work assignment. This may involve having the host employer designate the components involved are ready for servicing, repair or maintenance.

vi) Safe-for-work designation by the host employer may involve cleaning, flushing or otherwise making sure that work assignment components are in fact safe and ready for work to begin. In situations when the host employer does not make this designation, host employer personnel should specify how the equipment, machine, system or process should be rendered safe.

vii) The authorized person in charge of the group LOTO must identify, locate, and isolate all energy sources associated with the job. If needed, they must also identify, locate, and prepare relief devices for ensuring that residual or accumulated energy creates no employee hazard.

viii) The authorized person in charge of the group LOTO places the appropriate LOTO devices and tags on energy-isolating devices and then tests the devices to confirm that energy has been effectively isolated and cannot re-accumulate, re-charge or build up pressure. In certain situations the host employer's personnel may also apply LOTO devices in addition to those places by the authorized person in charge.

ix) The authorized person in charge of the group LOTO shall record LOTO information on the work permit in accordance with form procedures.

x) All keys to lockout devices must be placed in a group lockout box (or a similar securing device). This box then shall be locked by the authorized person in charge of the group LOTO. The group LOTO box shall be located in a secure place known to all authorized persons involved with the work.

xi) Each authorized person and host employer personnel involved in the group LOTO shall place his or her individual locks and tags to the group LOTO box prior to beginning the work at hand.

xii) Company employees involved in the group LOTO should:

(1) Follow and respect the LOTO process.

(2) Check and, as applicable, test specific LOTO device locations to confirm that proper and effective LOTO is in place.

(3) The authorized person in charge of the group LOTO, or someone this person may designate, shall direct and accompany the other authorized persons to the specific locations where energy isolation is in place.

xiii) During shift changes and the arrival of new crews, the group LOTO box shall remain locked until the authorized person in charge of the group LOTO determines that it is safe to remove the keys. This means that the lock placed by the authorized person in charge of the group LOTO usually stays on the group LOTO box until the job is completed. Other control procedures approved by the authorized person in charge of the group LOTO may be used as required as long as personnel are properly protected.

xiv) When work is finished, the authorized person in charge of the group LOTO and, if applicable, a host employer representative inspects and reviews the completed work to confirm that it is safe to remove LOTO devices. Special precautions shall be taken to ensure that all personnel are relocated away from danger if removal of a LOTO device might present a hazard.

xv) The authorized person in charge of the group LOTO shall review all forms and permits filled out during the work to ensure that the assignment is properly and safely completed. When this is accomplished, the authorized person in charge of the group LOTO is ready to remove LOTO devices from the lockout box and all other energy isolation devices.

xvi) All applicable work permits and forms shall be completed, signed and submitted in accordance with company and host employer requirements.

xvii) Personnel and supervisors shall acknowledge that each group LOTO is different and requires individual site-specific consideration and special procedures / precautions as appropriate to situations at hand. This may include procedures and precautions that are not included in the procedures explained above. Consequently, the authorized person in charge of a group LOTO has the authority to do whatever is necessary to achieve safety for all company employees and personnel in the work area.

i) Periodic Assessment and Challenge of LOTO Procedures. The company shall inspect, evaluate and challenge LOTO procedures for energy control at least once each year. This process is intended and shall be carried out to ensure that LOTO procedures are correct, effective and in accordance with OSHA standards and requirements. Additionally, the process shall identify and address any inadequacies or needs for updating that may be discovered.

FIRE PROTECTION

SECTION 10

Radial Drilling Services, Inc.
(T) +1.281.374.7507
(F) +1.281.374.7509
web: www.radialdrilling.com
e-mail: info@radialdrilling.com

CONTENTS

Section 10 – Fire Protection and Response

Radial Drilling Services Inc. Tel.: (281) 374-7507, Fax: (281) 374-7509, e-mail: *info@radialdrilling.com*

Fire Protection

Applicable OSHA Standards: 29 CFR 1926.24, .150-.155

1 PURPOSE & SCOPE

a) The purpose of this Radial Drilling Services, Inc. policy is to outline prevention and protective measures which should be taken to ensure protection of personnel, property, and the environment from a fire incident.

b) This program applies to all Company-controlled worksites where an employee or a subcontract worker may be occupationally exposed to fire hazards.

2 FIRE PREVENTION

a) Electrical wiring and equipment for light, heat or power purposes must be installed in accordance with the national electric code. The proper type and size of fuses shall be used at all times. All equipment and portable tools are to be grounded. Explosion proof fixtures are required in hazardous classified locations.

b) Housekeeping - Remove trash daily from the work areas and from the work site. Use trash drums to reduce extra handling. Put rags in closed containers. Rags used for solvent cleaning should be kept in a closed metal container until properly disposed of.

c) Compressed Gas Cylinder – Separate the full cylinders from “empty” cylinders in storage. Keep oxygen cylinders separate from fuel cylinders by 20 feet, or by a fire resistant barrier. Tie cylinders in a vertical position. Keep oil and grease away from oxygen valves. Turn cylinders off when not in use. Protect cylinders from excess heat (sun, open flame, equipment exhausts, sparks slag, etc.) No cylinder storage inside buildings.

d) Gasoline and Diesel Pumps - Service station type pumps require physical barriers to prevent damage to the pumps. “No Smoking or Open Flame” signs are also necessary. Dispensing nozzles shall be of an approved type.

e) Internal Combustion Engines - Turn off engine before refueling, and allow a minimum of fifteen (15) minutes for engine to cool off. Insulate exhaust stacks near combustible material. Keeps exhaust discharge away from flammable liquids (particularly truck exhausts).

f) Material Storage - Outside - Storage areas containing combustible material (lumber, etc.), or non-combustible material in combustible containers (metal parts in wooden boxes) need to be separated from other material by at least 20 feet on all sides to help prevent the spread of fire and to al low fire equipment access. A single storage area cannot be larger than 50 by 150 feet. All weeds, dead grass, and combustible trash need to be kept out of the storage areas and out of access ways.

g) No Smoking or Open Flame Areas and Signs - Areas where flammable liquids are stored or dispensed need to be clearly identified. “NO SMOKING OR OPEN FLAME” signs need to be posted no more than 25 feet away from the hazard. Areas containing large quantities of combustible materials should also be identified and marked with the same signs. Cigarette butt cans will help prevent careless disposal of smoking materials.

h) Open Flames - Welding torches, matches, heaters, and other open flames have caused many unnecessary fires. Check the area for possible hazards before lighting up.

i) Sparks and Slag - To avoid a fire, move flammable or combustible materials before starting to weld or burn. If material cannot be moved, cover it with fire retardant material.

j) Tarps and Plastic Coverings - Tarps must be fire retardant. Plastic sheets must be flame resistant if they are to be used with flame or high heat operations. Tie tarps and plastic securely so they cannot blow loose.

k) Temporary Heating Devices - No open burning of trash. Propane heating units need automatic fuel shut-off valves. Oil salamanders must be cool before being refilled, or being moved. All heaters need good clearance or non-combustible insulation on all sides, top and bottom.

l) A temporary building shall not be erected where it will adversely affect any means of exit.

m) No combustible material shall be stored with 10 feet of a building or structure.

n) Roadways and access to storage areas must be maintained to accommodate the widest vehicle that may be used for fire fighting purposes.

o) Material shall not be stored within 36 inches of a fire door opening.

3 FLAMMABLE AND COMBUSTIBLE LIQUID STORAGE

a) Only approved containers and portable tanks shall be used for storage and handling.

b) Flammable Liquids - All - Liquids with a flash point below 140 degrees F are referred to as “flammable liquids.” Store in original containers until needed. All tanks, drums, containers, cans and cabinets are to be electrically grounded and labeled with the name of the material. Do not mix contents and labels. Handle small quantities (5 gallon maximum) in “safety cans.” Two main features of a safety can are a spring-loaded cap and a flame arrester.

c) Flammable or Combustible Liquids shall not be stored in areas used for exits, stairways, or normally used for the safe passage of personnel.

4 INDOOR STORAGE OF FLAMMABLE AND COMBUSTIBLE LIQUIDS

a) No more than 25 gallons of flammable or combustible liquids are to be stored inside a building unless stored in an approved storage cabinet and labeled "flammable - keep fire away."

b) No more than 60 gallons of flammable or 120 gallons of combustible liquids may be stored inside of a single storage cabinet inside a building. No more than 3 storage cabinets are allowed in a single building when containing the maximum amount allowed.

c) Quantities of flammable or combustible liquids stored inside a building which exceed the amount of three storage cabinets must be stored in an approved storage room which meets the applicable requirements of The National Fire Protection Association. An aisle space of three feet wide must be maintained at all times in inside storage rooms.

d) Materials which react with water shall not be stored in the same location as flammable or combustible liquids. A separate storage area should be provided for water reactive materials and they should be conspicuously marked as such.

e) Electrical wiring and equipment located in inside flammable and combustible liquid storage rooms shall be approved for hazardous locations.

5 STORAGE OF FLAMMABLE AND COMBUSTIBLE LIQUIDS OUTSIDE OF BUILDINGS

No more than 1,100 gallons of flammable or combustible liquids may be stored in any one outside storage area unless separated by a minimum aisle space of 5 feet. Groups of containers shall not be nearer than 20 feet to a building. Each container or outside storage area must be accessible by a 12 foot wide access for a maximum distance of 200 feet. At least one portable fire extinguisher having a rating of not less than 20-B units shall be located not less than 25 feet, nor more than 75 feet, from any flammable liquid storage area located outside.

6 HANDLING FLAMMABLE AND COMBUSTIBLE LIQUIDS

a) Dispensing of flammable or combustible liquids from one container to an other shall be separated from other operations by a distance of not less than 25 feet.

b) Containers shall be bonded when transferring flammable liquids from one container to another.

c) Approved self-closing valves shall be used for dispensing of flammable or combustible liquids.

d) Flammable or combustible liquids shall be drawn or transferred by either gravity or pump only. Never transfer by means of air pressure on the container or portable tank.

e) Flammable liquids shall be kept in closed containers when not actually in use

f) Precautions shall be taken to eliminate leakage or spillage of flammable and combustible liquids where necessary such as the use of funnels.

g) Leakage or spillage from flammable and combustible liquids must be promptly cleaned up and properly disposed of.

h) Flammable liquids may be used only where there are no open flames or other sources of ignition within 50 feet of the operation, unless conditions warrant greater clearance.

7 TRAINING

a) Where the Company has provided portable fire extinguishers for employees use in the workplace, training shall be provided to educate and familiarize employees with the general principles of fire extinguisher use, the hazards involved in incipient stage fire fighting, and general safe use of the extinguisher.

b) Work environments, classified as hot work, sometimes require the use of a trained fire watch. Whenever personnel are assigned as fire watch they shall be properly trained. Fire watches are to be at the site prior to beginning hot work and thirty minutes after hot work is complete.

c) Fire extinguisher training shall be conducted when the employee is initially assigned and at least annually thereafter.

8 FIRE EXTINGUISHERS - MOUNTING AND ACCESS

a) Extinguishers are not to be left on the floor, or a scaffold, or on the ground. They are to be mounted on a wall, handrail, barricade, etc.

b) Extinguishers that have a total weight of more than 40 pounds are to be mounted with the top of the extinguisher no more than 42 inches above the floor. Extinguishers weighing 40 pounds or less may be mounted with the top as high as 5 feet above the floor. (Mounting all extinguishers at the 42 inch height is a good habit.)

c) Extinguishers should be located where they can be easily seen. In cases where this is not practical, signs or red paint marking, need to be added to identify the location of the extinguisher.

d) Keep trash and stored material away from extinguishers to prevent block age of the access to the extinguisher.

9 FIRE EXTINGUISHERS - INSPECTION AND TESTING

a) The Company shall ensure that portable fire extinguishers are visually inspected at least monthly and inspected annually as part of a thorough maintenance check of the integrity of the device.

b) Portable fire extinguishers shall be given an annual maintenance check to ensure integrity of the device. Stored pressure extinguishers do not require an internal examination. A written record shall be made of the annual maintenance date. This record shall be retained for one year after the last entry or the life of the shell, whichever is less. The record shall be available to the Assistant Secretary upon request.

c) Monthly Inspections

i) Every fire extinguisher is to be visually inspected at least once a month. The in spection is to include:

(1) Proper location

(2) Fully charged

(3) Seal wire not broken

(4) Free of any obvious defects or damage

(5) Inspection tag is current

ii) Annual inspections:

A through examination of each extinguisher shall be conducted annually by an individual trained to examine, repair, and recharge extinguishers. An inspection tag is to be attached to each extinguisher showing the date of the annual examination, the date of the recharge, and the initials of the individual making the examination.

d) Hydrostatic Tests:

Extinguishers more than 5 years old may need a hydrostatic test if they are to remain in service.

FALL PROTECTION SAFETY

SECTION 11

Radial Drilling Services, Inc.
(T) +1.281.374.7507
(F) +1.281.374.7509
web: www.radialdrilling.com
e-mail: info@radialdrilling.com

CONTENTS

Section 11 – Fall Protection Safety

Fall Proctection Safety

Applicable OSHA Standards: 29 CFR 1926.500

1 PURPOSE & SCOPE

a) This policy sets forth requirements and criteria for fall protection in work places covered under 29 CFR part 1926. The provisions of this policy do not apply when employees are making an inspection, investigation, or assessment of workplace conditions prior to the actual start of work or after all work has been completed.

b) This policy applies to all employees and subcontractors working within Radial Drilling Services, Inc. controlled job sites.

2 DEFINITIONS

a) "Anchorage" means a secure point of attachment for lifelines, lanyards or deceleration devices.

b) "Body belt (safety belt)" means a strap with means both for securing it about the waist and for attaching it to a lanyard, lifeline, or deceleration device.

c) "Body harness" means straps which may be secured about the employee in a manner that will distribute the fall arrest forces over at least the thighs, pelvis, waist, chest and shoulders with means for attaching it to other components of a personal fall arrest system.

d) "Buckle" means any device for holding the body belt or body harness closed around the employee's body.

e) "Connector" means a device which is used to couple (connect) parts of the personal fall arrest system and positioning device systems together. It may be an independent component of the system, such as a carabineer, or it may be an integral component of part of the system (such as a buckle or Dee-ring sewn into a body belt or body harness, or a snap-hook spliced or sewn to a lanyard or self-retracting lanyard).

f) "Controlled access zone (CAZ)" means an area in which certain work may take place without the use of guardrail systems, personal fall arrest systems, or safety net systems and access to the zone is controlled.

g) "Dangerous equipment" means equipment (such as tanks, degreasing units, machinery, electrical equipment, and other units) which, as a result of form or function, may be hazardous to employees who fall onto or into such equipment.

h) "Deceleration device" means any mechanism, such as a rope grab, rip-stitch lanyard, specially-woven lanyard, tearing or deforming lanyards, automatic self-retracting lifelines/lanyards, etc., which serves to dissipate a substantial amount of energy during a fall arrest, or otherwise limit the energy imposed on an employee during fall arrest.

i) "Deceleration distance" means the additional vertical distance a falling employee travels, excluding lifeline elongation and free fall distance, before stopping, from the point at which the deceleration device begins to operate. It is mea sured as the distance between the location of an employee's body belt or body harness attachment point at the moment of activation (at the onset of fall arrest forces) of the deceleration device during a fall, and the location of that attachment point after the employee comes to a full stop.

j) "Equivalent" means alternative designs, materials, or methods to protect against a hazard which the Site Supervisor can demonstrate will provide an equal or greater degree of safety for employees than the methods, materials or designs specified in the standard.

k) "Failure" means load refusal, breakage, or separation of component parts. Load refusal is the point where the ultimate strength is exceeded.

l) "Free fall" means the act of falling before a personal fall arrest system begins to apply force to arrest the fall.

m) "Free fall distance" means the vertical displacement of the fall arrest at tachment point on the employee's body belt or body harness between onset of the fall and just before the system begins to apply force to arrest the fall. This distance excludes deceleration distance, and lifeline/lanyard elongation, but includes any deceleration device slide distance or self-re tracting lifeline/lanyard extension before they operate and fall arrest forces occur.

n) "Guardrail system" means a barrier erected to prevent employees from falling to lower levels.

o) "Hole" means a gap or void 2 inches (5.1 cm) or more in its least dimension, in a floor, roof, or other walking/working surface.

p) "Infeasible" means that it is impossible to perform the construction work using a conventional fall protection system (i.e., guardrail system, safety net system, or personal fall arrest system) or that it is technologically impossible to use any one of these systems to provide fall protection.

q) "Lanyard" means a flexible line of rope, wire rope, or strap which generally has a connector at each end for connecting the body belt or body harness to a deceleration device, lifeline, or anchorage.

r) "Leading edge" means the edge of a floor, roof or other walking/working surface (such as the deck) which changes location as additional floor, roof, decking, or formwork sections are placed, formed, or constructed. A leading edge is considered to be an "unprotected side and edge" during periods when it is not actively and continuously under construction.

s) "Lifeline" means a component consisting of a flexible line for connection to an anchorage at one end to hang vertically (vertical lifeline), or for connection to anchorages at both ends to stretch horizontally (horizontal lifeline), and which serves as a means for connecting other components of a personal fall arrest system to the anchorage.

t) "Lower levels" means those areas or surfaces to which an employee can fall. Such areas or surfaces include, but are not limited to, ground levels, floors, platforms, ramps, runways, excavations, pits, tanks, material, water, equipment, structures, or portions thereof.

u) "Mechanical equipment" means motor or human propelled wheeled equipment used for work, except wheelbarrows and mop carts.

v) "Opening" means a gap or voids 30 inches (76 cm) or more high and 18 inches (48 cm) or more wide, in a wall or partition, through which employees can fall to a lower level.

w) "Personal fall arrest system" means a system used to arrest an employee in a fall from a working level. It consists of an anchorage, connectors, a body belt or body harness and may include a lanyard, deceleration device, lifeline, or suitable combinations of these. As of January 1, 1998, the use of a body belt for fall arrest is prohibited.

x) "Positioning device system" means a body belt or body harness system rigged to allow an employee to be supported on an elevated vertical surface, such as a wall, and work with both hands free while leaning.

y) "Rope grab" means a deceleration device which travels on a lifeline and automatically, by friction, engages the lifeline and locks so as to arrest the fall of an employee. A rope grab usually employs the principle of inertial locking, cam/level locking, or both.

z) "Roof" means the exterior surface on the top of a building. This does not include floors or formwork which, because a building has not been completed, temporarily becomes the top surface of a building.

aa) "Safety-monitoring system" means a safety system in which a competent person is responsible for recognizing and warning employees of fall hazards.

bb) "Self-retracting lifeline/lanyard" means a deceleration device containing a drum-wound line which can be slowly extracted from, or retracted onto, the drum under slight tension during normal employee movement, and which, after onset of a fall, automatically locks the drum and arrests the fall.

cc) "Snap hook" means a connector comprised of a hook-shaped member with a normally closed keeper, or similar arrangement, which may be opened to permit the hook to receive an object and, when released, automatically closes to retain the object. Snap hooks are generally one of two types:

a) The locking type with a self-closing, self-locking keeper which remains closed and locked until unlocked and pressed open for connection or disconnection; or

b) The non-locking type with a self-closing keeper which remains closed until pressed open for connection or disconnection. As of January 1, 1998, the use of a non-locking snap hook as part of personal fall arrest systems and positioning device systems is prohibited.

dd) "Toe board" means a low protective barrier that will prevent the fall of materials and equipment to lower levels and provide protection from falls for personnel.

ee) "Unprotected sides and edges" means any side or edge (except at entrances to points of access) of a walking/working surface, e.g., floor, roof, ramp, or runway where there is no wall or guardrail system at least 39 inches (1.0 m) high.

ff) "Walking/working surface" means any surface, whether horizontal or vertical on which an employee walks or works, including, but not limited to, floors, roofs, ramps, bridges, and runways, but not including ladders, vehicles, or trailers, on which employees must be located in order to per form their job duties.

gg) "Warning line system" means a barrier erected on a roof to warn employees that they are approaching an unprotected roof side or edge, and which designates an area in which roofing work may take place without the use of guardrail, body belt, or safety net systems to protect employees in the area.

hh) "Work area" means that portion of a walking/working surface where job duties are being performed.

3 GENERAL

A) Personal fall arrest systems, when stopping a fall, shall:

a) limit maximum arresting force on an employee to 1,800 pounds when used with a body harness

b) be rigged such that an employee can neither free fall more than 6 feet, nor contact any lower level, and, where practicable, the anchor end of the lanyard shall be secured at a level not lower than the employee's waist

c) bring an employee to a complete stop and limit maximum deceleration distance an employee travels to 3.5 feet

d) have sufficient strength to withstand twice the potential impact energy of an employee free falling a distance of 6 feet, or the free fall distance permitted by the system, whichever is less.

e) Fall protection is required whenever employees are potentially exposed to falls from heights of 6 feet or greater to lower levels. This includes work near and around excavations.

B) Use of guard rails, safety net, or personal fall arrest systems will be used as methods of fall protection when standard methods are not feasible or a greater hazard would be created by use of standard methods. Determination of employee exposure to fall hazards will be made without regard for the use of personal protective equipment.

C) Scaffolds, ladders or vehicle mounted work platforms may be utilized at a work location so long as employees have been sufficiently trained in the safe use of these devices and are authorized by the Site Supervisor for such work. Use of vehicle-mounted work platforms and scaffolding requires specific training for individual in charge of the work and users.

D) The Site Supervisor, in conjunction with the Company's Safety Coordinator, will determine if the walking or working surfaces on which employees are to work have the strength and structural integrity to support employees safely. Employees will be allowed to work on those surfaces only when the surfaces have the requisite strength and structural integrity.

E) Each employee on a walking/working surface (horizontal and vertical surface) with an unprotected side or edge which is 6 feet (1.8 m) or more above a lower level will be protected from falling by the use of guardrail systems, safety net systems, or personal fall arrest systems.

a) Each employee who is constructing a leading edge 6 feet (1.8 m) or more above lower levels will be protected from falling by guardrail systems, safety net systems, or personal fall arrest systems. Exception: When the Site Supervisor can demonstrate that it is infeasible or creates a greater hazard to use these systems, the Site Supervisor, in conjunction with the Company's Safety Coordinator, will develop and implement a fall protection plan which meets the requirements of paragraph (k) of 1926.502.

F) Each employee on a walking/working surface 6 feet (1.8 m) or more above a lower level where leading edges are under construction, but who is not engaged in the leading edge work, will be protected from falling by a guardrail system, safety net system, or personal fall arrest system. If a guardrail system is chosen to provide the fall protection, and a controlled access zone has already been established for leading edge work, the control line may be used in lieu of a guardrail along the edge that parallels the leading edge.

G) Each employee in a hoist area will be protected from falling 6 feet (1.8 m or more to lower levels by guardrail systems or personal fall arrest systems. If guardrail systems, [or chain, gate, or guardrail] or portions thereof, are removed to facilitate the hoisting operation (e.g., during landing of materials), and an employee must lean through the access opening or out over the edge of the access opening (to receive or guide equipment and materials, for example), that employee will be protected from fall hazards by a personal fall arrest system.

H) Each employee on walking/working surfaces will be protected from falling through holes more than 6 feet (1.8 m) above lower levels, by personal fall arrest systems, covers, or guardrail systems erected around such holes.

I) Each employee on a walking/working surface will be protected from trip ping in or stepping into or through holes by covers.

J) Each employee on a walking/working surface will be protected from objects falling through holes by covers.

K) Each employee on a derrick or similar structure will be protected from falling 6 feet (1.8 m) or more to lower levels by personal fall arrest sys tems, safety net systems, or positioning device systems.

L) Each employee on ramps, runways, and other walkways will be protected from falling 6 feet (1.8 m) or more to lower levels by guardrail systems.

M) Each employee at the edge of an excavation 6 feet (1.8 m) or more in depth will be protected from falling by guardrail systems, fences, or barricades when the excavations are not readily seen because of plant growth or other vision barrier.

N) Each employee at the edge of a well, pit, shaft, and similar excavation 6 feet (1.8m) or more in depth will be protected from falling by guardrail systems, fences, barricades, or covers.

O) Each employee less than 6 feet (1.8 m) above dangerous equipment will be protected from falling into or onto the dangerous equipment by guardrail systems or by equipment guards.

P) Each employee 6 feet (1.8 m) or more above dangerous equipment will be protected from fall hazards by guardrail systems, personal fall arrest systems, or safety net systems.

Q) Each employee reaching more than 10 inches (25 cm) below the level of the walking/working surface on which they are working will be protected from falling by a guardrail system, safety net system, or personal fall arrest system.

R) When an employee is exposed to falling objects, each employee will wear a hard hat and the Site Supervisor will implement one of the following measures:

a) Erect toe boards, screens, or guardrail systems to prevent objects from falling from higher levels; or,

b) Erect a canopy structure and keep potential fall objects far enough from the edge of the higher level so that those objects would not go over the edge if they were accidentally displaced; or,

c) Barricade the area to which objects could fall, prohibit employees from entering the barricaded area, and keep objects that may fall far enough away from the edge of a higher level so that those objects would not go over the edge if they were accidentally dis placed.

S) When fall protection is required for the protection of employees, a fall protection plan will be prepared by a qualified person and developed specifically for the site where the work is being performed. The plan must be maintained up to date.

T) When fall protection is required, a competent person will be assigned to: recognize fall hazards; warn employees if they are unaware of a fall hazard or are acting in an unsafe manner; be on same working surface and in visual sight; stay close enough for verbal communication; and not have other assignments that would distract the monitor's attention from the monitoring responsibilities.

U) When purchasing equipment and raw materials for use in fall protection systems applicable ANSI and ASTM requirements will be met.

4 GUARDRAIL SYSTEMS

A) Top edge height of top rails, or equivalent guardrail system members, will be 42 inches (1.1 m) plus or minus 3 inches (8 cm) above the walking/working level. When conditions warrant, the height of the top edge may exceed the 45-inch height, provided the guardrail system meets all other criteria of this paragraph.

B) Midrails, screens, mesh, intermediate vertical members, or equivalent intermediate structural members will be installed between the top edge of the guardrail system and the walking/working surface when there is no wall or parapet wall at least 21 inches (53 cm) high.

C) Midrails, when used, will be installed at a height midway between the top edge of the guardrail system and the walking/working level.

D) Screens and mesh, when used, will extend from the top rail to the walking/working level and along the entire opening between top rail supports.

E) Intermediate members (such as balusters), when used between posts, will be not more than 19 inches (48 cm) apart. Other structural members (such as additional midrails and architectural panels) will be installed so that there are no openings in the guardrail system that are more than 19 inches (.5 m) wide.

F) Guardrail systems will be capable of withstanding, without failure, a force ofat least 200 pounds (890 N) applied within 2 inches (5.1 cm) of the top edge, in any outward or downward direction, at any point along the top edge.

G) Midrails, screens, mesh, intermediate vertical members, solid panels, and equivalent structural members will be capable of withstanding, without failure, a force of at least 150 pounds (666 N) applied in any downward or outward direction at any point along the mid-rail or other member.

H) Guardrail systems will be so surfaced as to prevent injury to an employee from punctures or lacerations, and to prevent snagging of clothing.

I) The ends of all top rails and midrails will not overhang the terminal posts, except where such overhang does not constitute a projection hazard.

J) Steel banding and plastic banding will not be used as top rails or midrails.

k) Top rails and midrails will be at least one-quarter inch (0.6 cm) nominal diameter or thickness to prevent cuts and lacerations. If wire rope is used for top rails, it will be flagged at not more than 6-foot intervals with high-visibility material.

L) When guardrail systems are used at hoisting areas, a chain, gate or re movable guardrail section will be placed across the access opening between guardrail sections when hoisting operations are not taking place.

M) When guardrail systems are used at holes, they will be erected on all unprotected sides or edges of the hole.

N) When guardrail systems are used around holes used for the passage of materials, the hole will have not more than two sides provided with removable guardrail sections to allow the passage of materials. When the hole is not in use, it will be closed over with a cover, or a guardrail system will be provided along all unprotected sides or edges.

O) When guardrail systems are used around holes which are used as points of access (such as ladder ways), they will be provided with a gate, or be so offset that a person cannot walk directly into the hole.

P) Guardrail systems used on ramps and runways will be erected along each unprotected side or edge.

Q) Manila, plastic or synthetic rope being used for top rails or midrails will be inspected as frequently as necessary to ensure that it continues to meet the strength requirements of paragraph 3.6 of this section.

R) Safety nets may be used only after approval by the Company Safety Coordinator.

5 PERSONAL FALL ARREST SYSTEMS

A) All fall arresting, descent control, and rescue equipment shall be approved and used in accordance with the manufacturer's recommendations.

B) Connectors will be drop forged, pressed or formed steel, or made of equivalent materials.

C) Connectors will have a corrosion-resistant finish, and all surfaces and edges will be smooth to prevent damage to interfacing parts of the system.

D) D-rings and snap hooks will have a minimum tensile strength of 5,000 pounds (22.2 kN).

E) Snap hooks will be sized to be compatible with the member to which they are connected to prevent unintentional disengagement of the snap hook by depression of the snap hook keeper by the connected member, or will be a locking type snap hook designed and used to prevent disengagement of the snap hook by the contact of the snap hook keeper by the connected member. Effective January 1, 1998, only locking type snap hooks will be used.

F) Unless the snap hook is a locking type and designed for the following connections, snap hooks will not be engaged:

a) directly to webbing, rope or wire rope;
b) to each other;
c) to a d-ring to which another snap hook or other connector is attached;
d) to a horizontal lifeline; or
e) to any object which is incompatibly shaped or dimensioned in relation to the snap hook such that unintentional disengagement could occur by the connected object being able to depress the snap hook keeper and release itself.

G) On suspended scaffolds or similar work platforms with horizontal lifelines which may become vertical lifelines, the devices used to connect to a horizontal lifeline will be capable of locking in both directions on the lifeline.

H) Horizontal lifelines will be designed, installed, and used, under the supervision of a qualified person, as part of a complete personal fall arrest system, which maintains a safety factor of at least two.

I) Lanyards and vertical lifelines will have a minimum breaking strength of 5,000 pounds (22.2 kN).

J) Lifelines will be protected against being cut or abraded.

K) Self-retracting lifelines and lanyards which automatically limit free fall distance to 2 feet (0.61 m) or less will be capable of sustaining a minimum tensile load of 3,000 pounds (13.3 kN) applied to the device with the life line or lanyard in the fully extended position.

L) Self-retracting lifelines and lanyards which do not limit free fall distance to 2 feet (0.61 m) or less, rip stitch lanyards, and tearing and deforming lanyards will be capable of sustaining a minimum tensile load of 5,000 pounds (22.2 kN) applied to the device with the lifeline or lanyard in the fully extended position.

M) Ropes and straps (webbing) used in lanyards, lifelines, and strength components of body belts and body harnesses will be made from synthetic fibers.

N) Anchorages used for attachment of personal fall arrest equipment will be independent of any anchorage being used to support or suspend platforms and capable of supporting at least 5,000 pounds (22.2 kN) per employee attached, or will be designed, installed, and used as follows:

a) as part of a complete personal fall arrest system which maintains a safety factor of at least two; and

b) under the supervision of a qualified person.

c) The attachment point of the body belt will be located in the center of the wearer's back. The attachment point of the body harness will be located in the center of the wearer's back near shoulder level, or above the wearer's head.

O) Harnesses and components will be used only for employee protection (as part of a personal fall arrest system or positioning device system) and not to hoist materials.

P) Personal fall arrest systems and components subjected to impact loading will be immediately removed from service and will not be used again for employee protection until inspected and determined by the Company's Safety Coordinator to be undamaged and suitable for reuse.

Q) Personal fall arrest systems will be inspected prior to each use for wear, damage and other deterioration, and defective components will be removed from service.

R) Personal fall arrest systems will not be attached to guardrail systems, nor will they be attached to hoists.

6 POSITIONING DEVICE SYSTEMS

A) Positioning devices will be rigged so that an employee cannot free fall more than 2 feet (.9 m).

B) Positioning devices will be secured to an anchorage capable of supporting at least twice the potential impact load of an employee's fall or 3,000 pounds (13.3 kN), whichever is greater.

C) Positioning device systems will be inspected prior to each use for wear, damage, and other deterioration and defective components will be removed from service.

7 WARNING LINE SYSTEMS

Warning line systems may be used only after approval by the Company Safety Coordinator.

8 SAFETY MONITORING SYSTEMS

A) Where no other alternative measure has been implemented, the Site Supervisor will implement a safety monitoring system in conformance with 1926.502(h).

B) Safety monitoring systems and their use will comply with the following provisions:

a) The Site Supervisor will designate a competent person to monitor the safety of other employees and the Site Supervisor will ensure that the safety monitor complies with the following requirements:

i. The safety monitor will be competent to recognize fall hazards;

ii. The safety monitor will warn the employee when it appears that the employee is unaware of a fall hazard or is acting in an unsafe manner;

iii. The safety monitor will be on the same walking/working surface and within visual sighting distance of the employee being monitored;